EQ SYSTEMS®

EQ SMART-LEVEL

KEYSTONE AVALANCHE SYSTEM BOOK 2021-2022

TABLE OF CONTENTS

2021 AVALANCHE 295K		4
2021 AVALANCHE 312RS		5
2021 AVALANCHE 322RL		6
2021 AVALANCHE 338GK		7
2021 AVALANCHE 365MB		8
2021 AVALANCHE 375RD		9
2021 AVALANCHE 378BH		10
2021 AVALANCHE 382FL		11
2021 AVALANCHE 390DS		12
2021 AVALANCHE 395BH		13
2022 AVALANCHE 295K		14
2022 AVALANCHE 312RS		15
2022 AVALANCHE 322RL		16
2022 AVALANCHE 338GK		17
2022 AVALANCHE 352BH		18
2022 AVALANCHE 353FL		19
2022 AVALANCHE 372MB		20
2022 AVALANCHE 378BH		21
2022 AVALANCHE 382FL		22
2022 AVALANCHE 390DS		23
Jack Drawings	(7636, 70217)	24-27
Pumps	(70248, 70254, 70296)	28-42
Slide Cylinders	(70249, 70250)	43-46

Hose Kits	(70251, 70255, 70281, 70282, 70283, 70287, 70297, 70331, 70332, 70342, 70345, 70367)	47-82
Schematic	(8835)	83

2021 KEYSTONE AVALANCHE
295RK

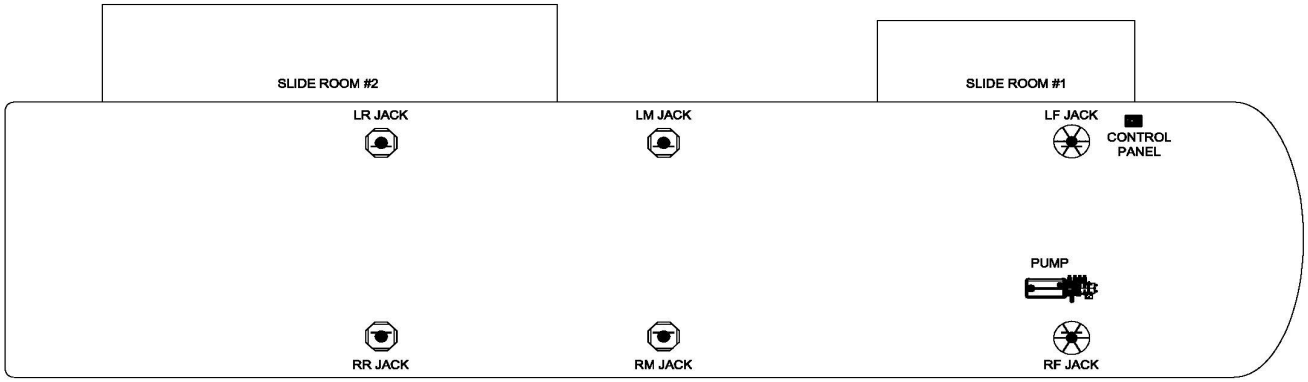

Notes:

Item, Length	Description / Location	Qty	Color	Equalizer Part No.
Kit	(Items listed below)	1		8873
Pump	5-Function, Jacks/1 Slide	1		70296
Jacks	17,000 lbs, 24" Stroke Jacks (Front)	2		70217
Jacks	7,500 lbs, 15" Stroke Jacks (Middle & Rear)	4		7636
Control Panel	Located on road side near front	1		3758SBT
Harness	Connects Control Panel & Pump	1		6150-15
Hose Kit	Complete Set of Hoses	1		70297
Hose, 4'	Pump to Jack, Right Front Top	1	White Solid	2459
Hose, 6'	Pump to Jack, Right Front Bottom	1	White Stripe	2461
Hose, 10'	Tee to RR & RM Jack Top	2	Yellow Solid	2465
Hose, 10'	Tee to RR & RM Jack Bottom	2	Yellow Stripe	2465
Hose, 10'	Tee to LR & LM Jack Top	2	Orange Solid	2465
Hose, 10'	Tee to LR & LM Jack Bottom	2	Orange Stripe	2465
Hose, 10'	Pump to Jack, Left Front Top	1	Brown Solid	2465
Hose, 12'	Pump to Jack, Left Front Bottom	1	Brown Stripe	2467
Hose, 22'	Pump to Tee, Right Rear Top	1	Yellow Solid	2476
Hose, 22'	Pump to Tee, Right Rear Bottom	1	Yellow Stripe	2476
Hose, 28'	Pump to Tee, Left Rear Top	1	Orange Solid	2535
Hose, 28'	Pump to Tee, Left Rear Bottom	1	Orange Stripe	2535
Slide Room 1	Electric	1		
Slide Room 2	EQ 38" Slide Cylinder Only	1		70250
Hose, 28'	Pump to closed end	1	Green Solid	2535
Hose, 32'	Pump to rod end	1	Green Stripe	2482
Bolt Kit	Jacks	1		7870
Fitting Kit	Jacks	1		7871ALAV

Revisions	

2021 KEYSTONE AVALANCHE
312RS

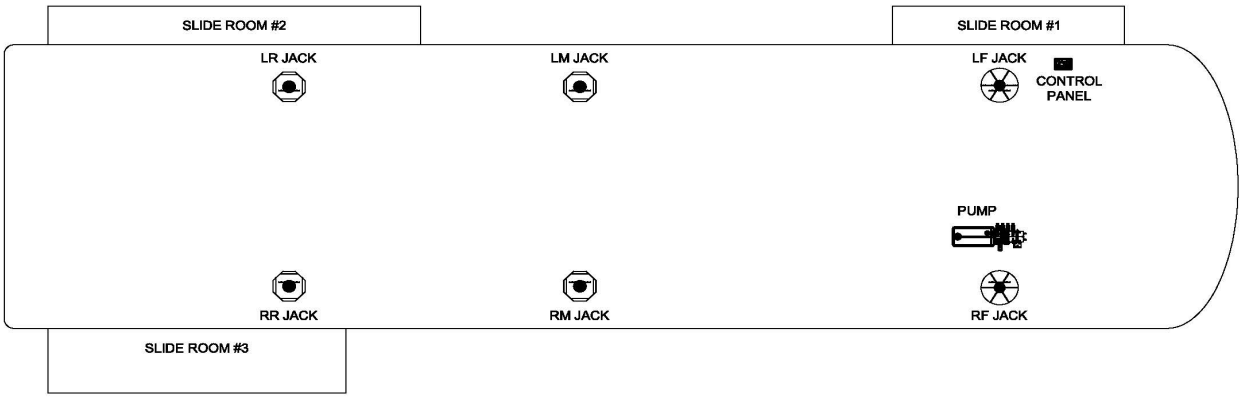

Notes:

Item, Length	Description / Location	Qty	Color	Equalizer Part No.
Kit	(Items listed below)	1		8868
Pump	6-Function, Jacks/2 Slides	1		70254
Jacks	17,000 lbs, 24" Stroke Jacks (Front)	2		70217
Jacks	7,500 lbs, 15" Stroke Jacks (Middle & Rear)	4		7636
Control Panel	Located on road side near front	1		3758SBT
Harness	Connects Control Panel & Pump	1		6150-15
Hose Kit	Complete Set of Hoses	1		70287
Hose, 4'	Pump to Jack, Right Front Top	1	White Solid	2459
Hose, 6'	Pump to Jack, Right Front Bottom	1	White Stripe	2461
Hose, 10'	Tee to RR & RM Jack Top	2	Yellow Solid	2465
Hose, 10'	Tee to RR & RM Jack Bottom	2	Yellow Stripe	2465
Hose, 10'	Tee to LR & LM Jack Top	2	Orange Solid	2465
Hose, 10'	Tee to LR & LM Jack Bottom	2	Orange Stripe	2465
Hose, 10'	Pump to Jack, Left Front Top	1	Brown Solid	2465
Hose, 12'	Pump to Jack, Left Front Bottom	1	Brown Stripe	2467
Hose, 22'	Pump to Tee, Right Rear Top	1	Yellow Solid	2476
Hose, 22'	Pump to Tee, Right Rear Bottom	1	Yellow Stripe	2476
Hose, 28'	Pump to Tee, Left Rear Top	1	Orange Solid	2535
Hose, 28'	Pump to Tee, Left Rear Bottom	1	Orange Stripe	2535
Slide Room 1	Electric	1		
Slide Room 2	EQ 24" Slide Cylinder Only	1		70249
Hose, 24'	Pump to closed end	1	Green Solid	2478
Hose, 26'	Pump to rod end	1	Green Stripe	3018
Slide Room 3	EQ 38" Slide Cylinder Only	1		70250
Hose, 32'	Pump to closed end	1	Purple Solid	2482
Hose, 28'	Pump to rod end	1	Purple Stripe	2535
Bolt Kit	Jacks	1		7870
Fitting Kit	Jacks	1		7871ALAV

Revisions	

2021 KEYSTONE AVALANCHE
322RL

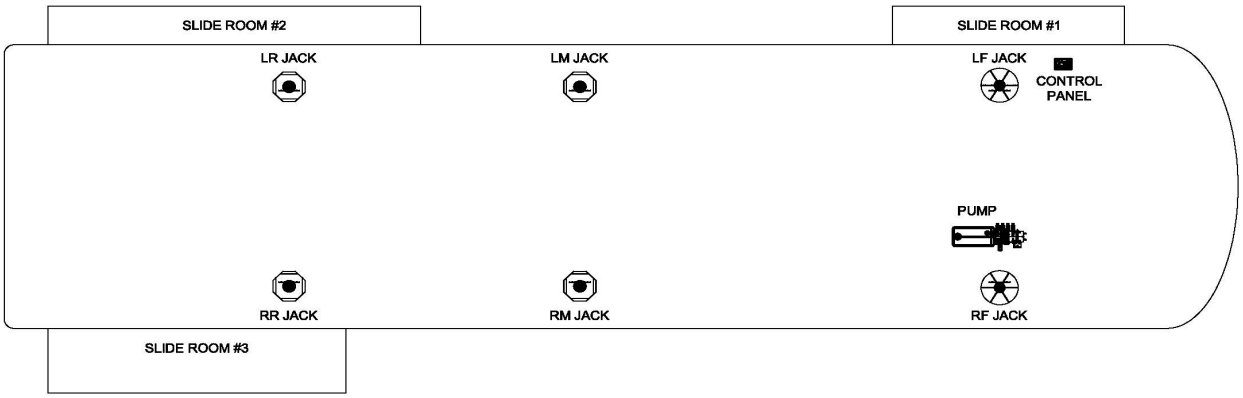

Notes:

Item, Length	Description / Location	Qty	Color	Equalizer Part No.
Kit	(Items listed below)	1		8969
Pump	6-Function, Jacks/2 Slides	1		70254
Jacks	17,000 lbs, 24" Stroke Jacks (Front)	2		70217
Jacks	7,500 lbs, 15" Stroke Jacks (Middle & Rear)	4		7636
Control Panel	Located on road side near front	1		3758SBT
Harness	Connects Control Panel & Pump	1		6150-15
Hose Kit	Complete Set of Hoses	1		70331
Hose, 4'	Pump to Jack, Right Front Top	1	White Solid	2459
Hose, 6'	Pump to Jack, Right Front Bottom	1	White Stripe	2461
Hose, 10'	Tee to RR & RM Jack Top	2	Yellow Solid	2465
Hose, 10'	Tee to RR & RM Jack Bottom	2	Yellow Stripe	2465
Hose, 10'	Tee to LR & LM Jack Top	2	Orange Solid	2465
Hose, 10'	Tee to LR & LM Jack Bottom	2	Orange Stripe	2465
Hose, 10'	Pump to Jack, Left Front Top	1	Brown Solid	2465
Hose, 12'	Pump to Jack, Left Front Bottom	1	Brown Stripe	2467
Hose, 22'	Pump to Tee, Right Rear Top	1	Yellow Solid	2476
Hose, 22'	Pump to Tee, Right Rear Bottom	1	Yellow Stripe	2476
Hose, 28'	Pump to Tee, Left Rear Top	1	Orange Solid	2535
Hose, 28'	Pump to Tee, Left Rear Bottom	1	Orange Stripe	2535
Slide Room 1	Electric	1		
Slide Room 2	EQ 24" Slide Cylinder Only	1		70249
Hose, 36'	Pump to closed end	1	Green Solid	2486
Hose, 38'	Pump to rod end	1	Green Stripe	2488
Slide Room 3	EQ 38" Slide Cylinder Only	1		70250
Hose, 36'	Pump to closed end	1	Purple Solid	2486
Hose, 32'	Pump to rod end	1	Purple Stripe	2482
Bolt Kit	Jacks	1		7870
Fitting Kit	Jacks	1		7871ALAV

Revisions	

2021 KEYSTONE AVALANCHE
338GK

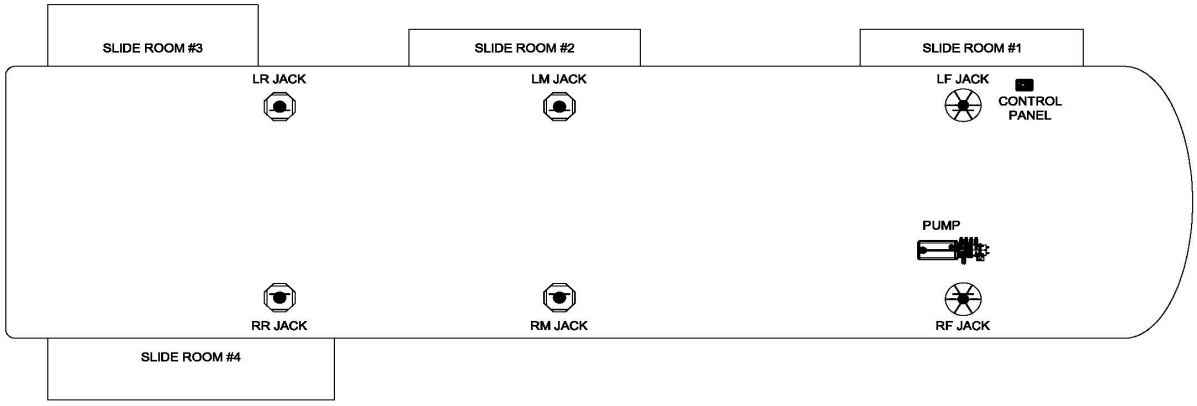

Notes:

Item, Length	Description / Location	Qty	Color	Equalizer Part No.
Kit	(Items listed below)	1		8858
Pump	7-Function, Jacks/3 Slides	1		70248
Jacks	17,000 lbs, 24" Stroke Jacks (Front)	2		70217
Jacks	7,500 lbs, 15" Stroke Jacks (Middle & Rear)	4		7636
Control Panel	Located on road side near front	1		3758SBT
Harness	Connects Control Panel & Pump	1		6150-15
Hose Kit	Complete Set of Hoses	1		70281
Hose, 4'	Pump to Jack, Right Front Top	1	White Solid	2459
Hose, 6'	Pump to Jack, Right Front Bottom	1	White Stripe	2461
Hose, 10'	Tee to RR & RM Jack Top	2	Yellow Solid	2465
Hose, 10'	Tee to RR & RM Jack Bottom	2	Yellow Stripe	2465
Hose, 10'	Tee to LR & LM Jack Top	2	Orange Solid	2465
Hose, 10'	Tee to LR & LM Jack Bottom	2	Orange Stripe	2465
Hose, 10'	Pump to Jack, Left Front Top	1	Brown Solid	2465
Hose, 12'	Pump to Jack, Left Front Bottom	1	Brown Stripe	2467
Hose, 24'	Pump to Tee, Right Rear Top	1	Yellow Solid	2478
Hose, 24'	Pump to Tee, Right Rear Bottom	1	Yellow Stripe	2478
Hose, 30'	Pump to Tee, Left Rear Top	1	Orange Solid	2527
Hose, 30'	Pump to Tee, Left Rear Bottom	1	Orange Stripe	2527
Slide Room 1	Electric			
Slide Room 2	EQ 24" Slide Cylinder Only	1		70249
Hose, 22'	Pump to closed end	1	Green Solid	2476
Hose, 24'	Pump to rod end	1	Green Stripe	2478
Slide Room 3	EQ 38" Slide Cylinder Only	1		70250
Hose, 32'	Pump to closed end	1	Purple Solid	2482
Hose, 36'	Pump to rod end	1	Purple Stripe	2486
Slide Room 4	EQ 38" Slide Cylinder Only	1		70250
Hose, 36'	Pump to closed end	1	Grey Solid	2486
Hose, 32'	Pump to rod end	1	Grey Stripe	2482
Bolt Kit	Jacks	1		7870
Fitting Kit	Jacks	1		7871ALAV

Revisions	

2021 KEYSTONE AVALANCHE
365MB

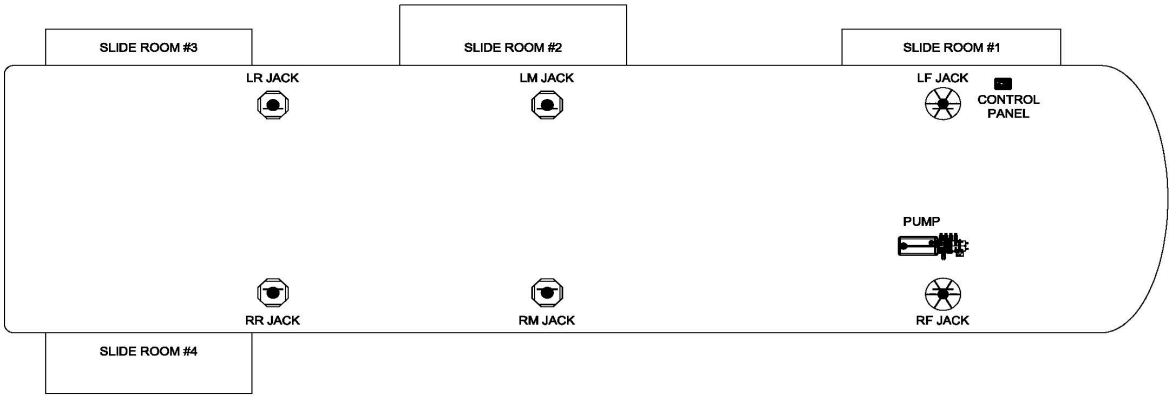

Notes:

Item, Length	Description / Location	Qty	Color	Equalizer Part No.
Kit	(Items listed below)	1		8859
Pump	7-Function, Jacks/3 Slides	1		70248
Jacks	17,000 lbs, 24" Stroke Jacks (Front)	2		70217
Jacks	7,500 lbs, 15" Stroke Jacks (Middle & Rear)	4		7636
Control Panel	Located on road side near front	1		3758SBT
Harness	Connects Control Panel & Pump	1		6150-15
Hose Kit	Complete Set of Hoses	1		70282
Hose, 4'	Pump to Jack, Right Front Top	1	White Solid	2459
Hose, 6'	Pump to Jack, Right Front Bottom	1	White Stripe	2461
Hose, 10'	Tee to RR & RM Jack Top	2	Yellow Solid	2465
Hose, 10'	Tee to RR & RM Jack Bottom	2	Yellow Stripe	2465
Hose, 10'	Tee to LR & LM Jack Top	2	Orange Solid	2465
Hose, 10'	Tee to LR & LM Jack Bottom	2	Orange Stripe	2465
Hose, 10'	Pump to Jack, Left Front Top	1	Brown Solid	2465
Hose, 12'	Pump to Jack, Left Front Bottom	1	Brown Stripe	2467
Hose, 26'	Pump to Tee, Right Rear Top	1	Yellow Solid	3018
Hose, 26'	Pump to Tee, Right Rear Bottom	1	Yellow Stripe	3018
Hose, 32'	Pump to Tee, Left Rear Top	1	Orange Solid	2482
Hose, 32'	Pump to Tee, Left Rear Bottom	1	Orange Stripe	2482
Slide Room 1	Electric			
Slide Room 2	EQ 38" Slide Cylinder Only	1		70250
Hose, 22'	Pump to closed end	1	Green Solid	2476
Hose, 26'	Pump to rod end	1	Green Stripe	3018
Slide Room 3	EQ 24" Slide Cylinder Only	1		70249
Hose, 38'	Pump to closed end	1	Purple Solid	2488
Hose, 40'	Pump to rod end	1	Purple Stripe	2490
Slide Room 4	EQ 38" Slide Cylinder Only	1		70250
Hose, 38'	Pump to closed end	1	Grey Solid	2488
Hose, 34'	Pump to rod end	1	Grey Stripe	2484
Bolt Kit	Jacks	1		7870
Fitting Kit	Jacks	1		7871ALAV

Revisions	

2021 KEYSTONE AVALANCHE
375RD

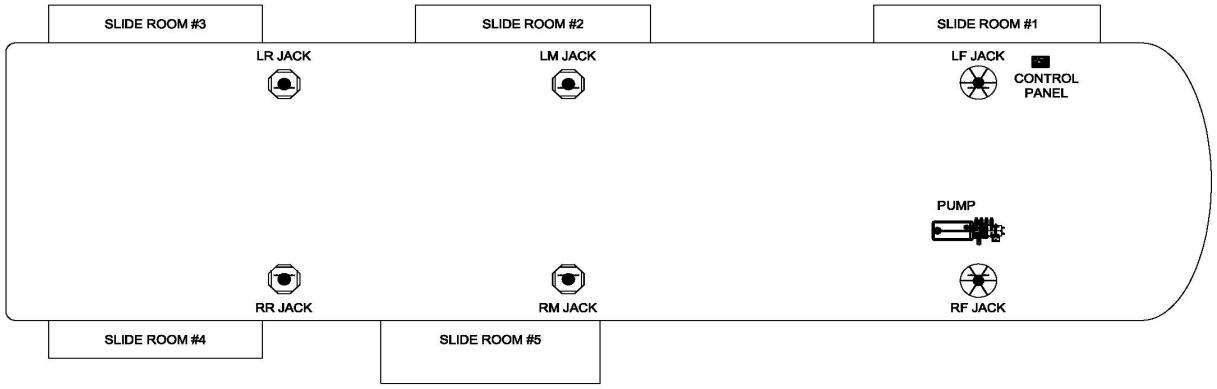

Notes:

Item, Length	Description / Location	Qty	Color	Equalizer Part No.
Kit	(Items listed below)	1		8861
Pump	6-Function, Jacks/2 Slides	1		70254
Jacks	17,000 lbs, 24" Stroke Jacks (Front)	2		70217
Jacks	7,500 lbs, 15" Stroke Jacks (Middle & Rear)	4		7636
Control Panel	Located on road side near front	1		3758SBT
Harness	Connects Control Panel & Pump	1		6150-15
Hose Kit	Complete Set of Hoses	1		70255
Hose, 4'	Pump to Jack, Right Front Top	1	White Solid	2459
Hose, 6'	Pump to Jack, Right Front Bottom	1	White Stripe	2461
Hose, 10'	Tee to RR & RM Jack Top	2	Yellow Solid	2465
Hose, 10'	Tee to RR & RM Jack Bottom	2	Yellow Stripe	2465
Hose, 10'	Tee to LR & LM Jack Top	2	Orange Solid	2465
Hose, 10'	Tee to LR & LM Jack Bottom	2	Orange Stripe	2465
Hose, 10'	Pump to Jack, Left Front Top	1	Brown Solid	2465
Hose, 12'	Pump to Jack, Left Front Bottom	1	Brown Stripe	2467
Hose, 26'	Pump to Tee, Right Rear Top	1	Yellow Solid	3018
Hose, 26'	Pump to Tee, Right Rear Bottom	1	Yellow Stripe	3018
Hose, 32'	Pump to Tee, Left Rear Top	1	Orange Solid	2482
Hose, 32'	Pump to Tee, Left Rear Bottom	1	Orange Stripe	2482
Slide Room 1	Electric			
Slide Room 2	EQ 24" Slide Cylinder Only	1		70249
Hose, 24'	Pump to closed end	1	Green Solid	2478
Hose, 26'	Pump to rod end	1	Green Stripe	3018
Slide Room 3	Electric			
Slide Room 4	Electric			
Slide Room 5	EQ 38" Slide Cylinder Only	1		70250
Hose, 24'	Pump to closed end	1	Purple Solid	2478
Hose, 20'	Pump to rod end	1	Purple Stripe	2475
Bolt Kit	Jacks	1		7870
Fitting Kit	Jacks	1		7871ALAV

Revisions	

2021 KEYSTONE AVALANCHE
378BH

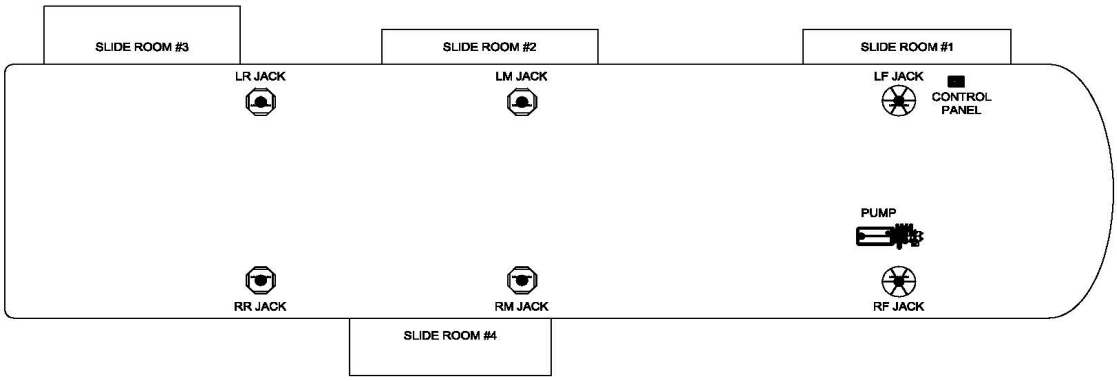

Notes:

Item, Length	Description / Location	Qty	Color	Equalizer Part No.
Kit	(Items listed below)	1		8860
Pump	7-Function, Jacks/3 Slides	1		70248
Jacks	17,000 lbs, 24" Stroke Jacks (Front)	2		70217
Jacks	7,500 lbs, 15" Stroke Jacks (Middle & Rear)	4		7636
Control Panel	Located on road side near front	1		3758SBT
Harness	Connects Control Panel & Pump	1		6150-15
Hose Kit	Complete Set of Hoses	1		70283
Hose, 4'	Pump to Jack, Right Front Top	1	White Solid	2459
Hose, 6'	Pump to Jack, Right Front Bottom	1	White Stripe	2461
Hose, 10'	Tee to RR & RM Jack Top	2	Yellow Solid	2465
Hose, 10'	Tee to RR & RM Jack Bottom	2	Yellow Stripe	2465
Hose, 10'	Tee to LR & LM Jack Top	2	Orange Solid	2465
Hose, 10'	Tee to LR & LM Jack Bottom	2	Orange Stripe	2465
Hose, 10'	Pump to Jack, Left Front Top	1	Brown Solid	2465
Hose, 12'	Pump to Jack, Left Front Bottom	1	Brown Stripe	2467
Hose, 26'	Pump to Tee, Right Rear Top	1	Yellow Solid	3018
Hose, 26'	Pump to Tee, Right Rear Bottom	1	Yellow Stripe	3018
Hose, 32'	Pump to Tee, Left Rear Top	1	Orange Solid	2482
Hose, 32'	Pump to Tee, Left Rear Bottom	1	Orange Stripe	2482
Slide Room 1	Electric			
Slide Room 2	EQ 24" Slide Cylinder Only	1		70249
Hose, 24'	Pump to closed end	1	Green Solid	2478
Hose, 26'	Pump to rod end	1	Green Stripe	3018
Slide Room 3	EQ 38" Slide Cylinder Only	1		70250
Hose, 38'	Pump to closed end	1	Purple Solid	2488
Hose, 42'	Pump to rod end	1	Purple Stripe	3400
Slide Room 4	EQ 38" Slide Cylinder Only	1		70250
Hose, 24'	Pump to closed end	1	Grey Solid	2478
Hose, 20'	Pump to rod end	1	Grey Stripe	2475
Bolt Kit	Jacks	1		7870
Fitting Kit	Jacks	1		7871ALAV

Revisions	

2021 KEYSTONE AVALANCHE
382FL

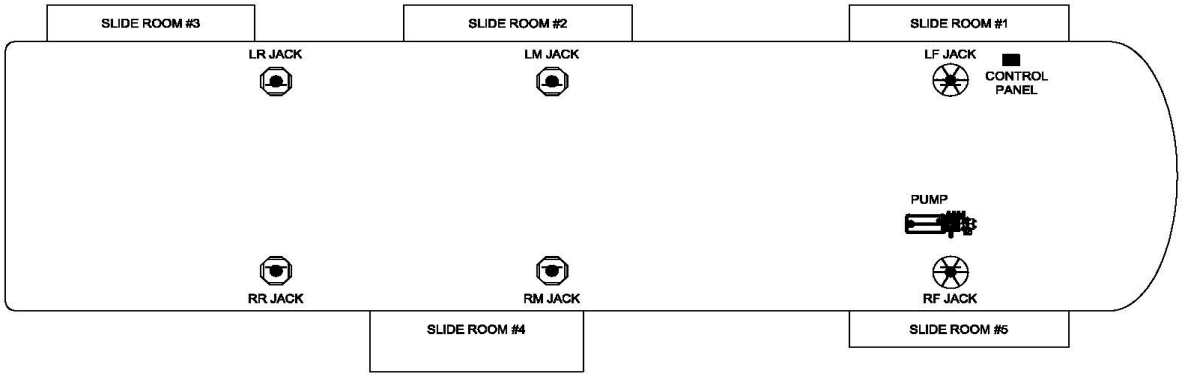

Notes:

Item, Length	Description / Location	Qty	Color	Equalizer Part No.
Kit	(Items listed below)	1		8861
Pump	6-Function, Jacks/2 Slides	1		70254
Jacks	17,000 lbs, 24" Stroke Jacks (Front)	2		70217
Jacks	7,500 lbs, 15" Stroke Jacks (Middle & Rear)	4		7636
Control Panel	Located on road side near front	1		3758SBT
Harness	Connects Control Panel & Pump	1		6150-15
Hose Kit	Complete Set of Hoses	1		70255
Hose, 4'	Pump to Jack, Right Front Top	1	White Solid	2459
Hose, 6'	Pump to Jack, Right Front Bottom	1	White Stripe	2461
Hose, 10'	Tee to RR & RM Jack Top	2	Yellow Solid	2465
Hose, 10'	Tee to RR & RM Jack Bottom	2	Yellow Stripe	2465
Hose, 10'	Tee to LR & LM Jack Top	2	Orange Solid	2465
Hose, 10'	Tee to LR & LM Jack Bottom	2	Orange Stripe	2465
Hose, 10'	Pump to Jack, Left Front Top	1	Brown Solid	2465
Hose, 12'	Pump to Jack, Left Front Bottom	1	Brown Stripe	2467
Hose, 26'	Pump to Tee, Right Rear Top	1	Yellow Solid	3018
Hose, 26'	Pump to Tee, Right Rear Bottom	1	Yellow Stripe	3018
Hose, 32'	Pump to Tee, Left Rear Top	1	Orange Solid	2482
Hose, 32'	Pump to Tee, Left Rear Bottom	1	Orange Stripe	2482
Slide Room 1	Electric			
Slide Room 2	EQ 24" Slide Cylinder Only	1		70249
Hose, 24'	Pump to closed end	1	Green Solid	2478
Hose, 26'	Pump to rod end	1	Green Stripe	3018
Slide Room 3	Electric			
Slide Room 4	EQ 38" Slide Cylinder Only	1		70250
Hose, 24'	Pump to closed end	1	Purple Solid	2478
Hose, 20'	Pump to rod end	1	Purple Stripe	2475
Slide Room 5	Electric			
Bolt Kit	Jacks	1		7870
Fitting Kit	Jacks	1		7871ALAV

Revisions	

2021 KEYSTONE AVALANCHE
390DS

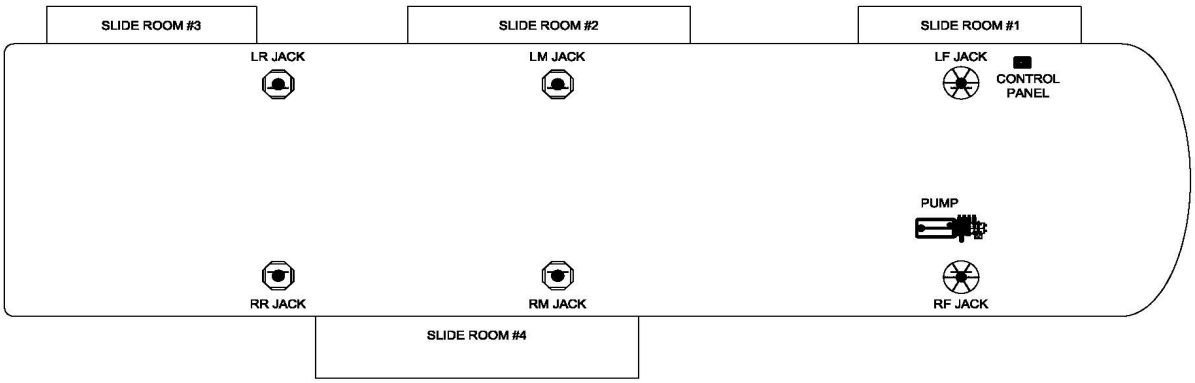

Notes:

Item, Length	Description / Location	Qty	Color	Equalizer Part No.
Kit	(Items listed below)	1		8970
Pump	6-Function, Jacks/2 Slides	1		70254
Jacks	17,000 lbs, 24" Stroke Jacks (Front)	2		70217
Jacks	7,500 lbs, 15" Stroke Jacks (Middle & Rear)	4		7636
Control Panel	Located on road side near front	1		3758SBT
Harness	Connects Control Panel & Pump	1		6150-15
Hose Kit	Complete Set of Hoses	1		70332
Hose, 4'	Pump to Jack, Right Front Top	1	White Solid	2459
Hose, 6'	Pump to Jack, Right Front Bottom	1	White Stripe	2461
Hose, 10'	Tee to RR & RM Jack Top	2	Yellow Solid	2465
Hose, 10'	Tee to RR & RM Jack Bottom	2	Yellow Stripe	2465
Hose, 10'	Tee to LR & LM Jack Top	2	Orange Solid	2465
Hose, 10'	Tee to LR & LM Jack Bottom	2	Orange Stripe	2465
Hose, 10'	Pump to Jack, Left Front Top	1	Brown Solid	2465
Hose, 12'	Pump to Jack, Left Front Bottom	1	Brown Stripe	2467
Hose, 26'	Pump to Tee, Right Rear Top	1	Yellow Solid	3018
Hose, 26'	Pump to Tee, Right Rear Bottom	1	Yellow Stripe	3018
Hose, 32'	Pump to Tee, Left Rear Top	1	Orange Solid	2482
Hose, 32'	Pump to Tee, Left Rear Bottom	1	Orange Stripe	2482
Slide Room 1	Electric			
Slide Room 2	EQ 24" Slide Cylinder Only	1		70249
Hose, 24'	Pump to closed end	1	Green Solid	2478
Hose, 26'	Pump to rod end	1	Green Stripe	3018
Slide Room 3	Electric			
Slide Room 4	EQ 38" Slide Cylinder Only	1		70250
Hose, 30'	Pump to rod end	1	Purple Stripe	2527
Hose, 34'	Pump to closed end	1	Purple Solid	2484
Bolt Kit	Jacks	1		7870
Fitting Kit	Jacks	1		7871ALAV

Revisions	

2021 KEYSTONE AVALANCHE
395BH

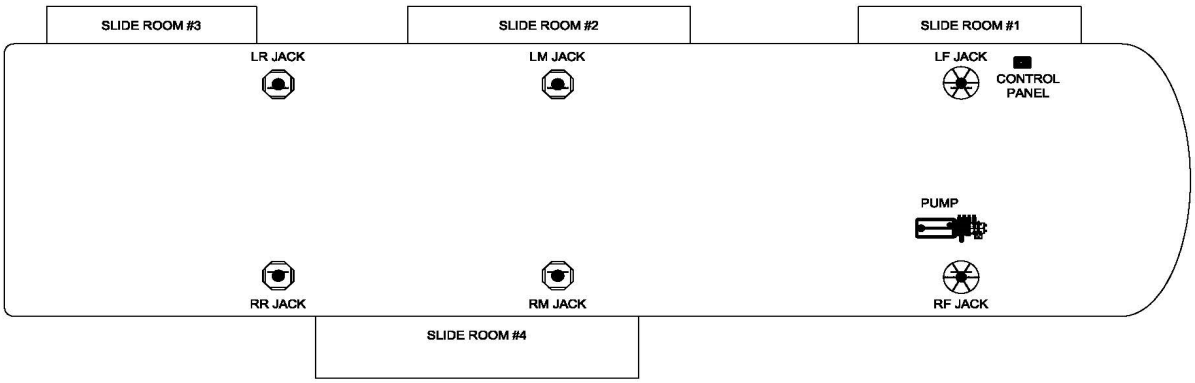

Notes:

Item, Length	Description / Location	Qty	Color	Equalizer Part No.
Kit	(Items listed below)	1		8835
Pump	7-Function, Jacks/3 Slides	1		70248
Jacks	17,000 lbs, 24" Stroke Jacks (Front)	2		70217
Jacks	7,500 lbs, 15" Stroke Jacks (Middle & Rear)	4		7636
Control Panel	Located on road side near front	1		3758SBT
Harness	Connects Control Panel & Pump	1		6150-15
Hose Kit	Complete Set of Hoses	1		70251
Hose, 4'	Pump to Jack, Right Front Top	1	White Solid	2459
Hose, 6'	Pump to Jack, Right Front Bottom	1	White Stripe	2461
Hose, 10'	Tee to RR & RM Jack Top	2	Yellow Solid	2465
Hose, 10'	Tee to RR & RM Jack Bottom	2	Yellow Stripe	2465
Hose, 10'	Tee to LR & LM Jack Top	2	Orange Solid	2465
Hose, 10'	Tee to LR & LM Jack Bottom	2	Orange Stripe	2465
Hose, 10'	Pump to Jack, Left Front Top	1	Brown Solid	2465
Hose, 12'	Pump to Jack, Left Front Bottom	1	Brown Stripe	2467
Hose, 26'	Pump to Tee, Right Rear Top	1	Yellow Solid	3018
Hose, 26'	Pump to Tee, Right Rear Bottom	1	Yellow Stripe	3018
Hose, 32'	Pump to Tee, Left Rear Top	1	Orange Solid	2482
Hose, 32'	Pump to Tee, Left Rear Bottom	1	Orange Stripe	2482
Slide Room 1	Electric			
Slide Room 2	EQ 24" Slide Cylinder Only	1		70249
Hose, 30'	Pump to closed end	1	Green Solid	2527
Hose, 32'	Pump to rod end	1	Green Stripe	2482
Slide Room 3	EQ 24" Slide Cylinder Only	1		70249
Hose, 36'	Pump to closed end	1	Purple Solid	2486
Hose, 38'	Pump to rod end	1	Purple Stripe	2488
Slide Room 4	EQ 38" Slide Cylinder Only	1		70250
Hose, 20'	Pump to rod end	1	Grey Stripe	2475
Hose, 24'	Pump to closed end	1	Grey Solid	2478
Bolt Kit	Jacks	1		7870
Fitting Kit	Jacks	1		7871ALAV

Revisions	

2022 KEYSTONE AVALANCHE
295RK

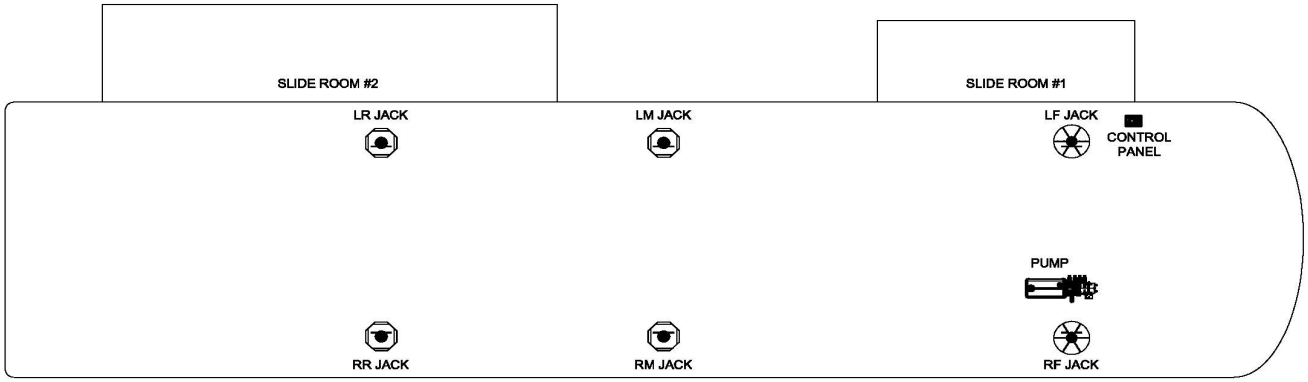

Notes:

Item, Length	Description / Location	Qty	Color	Equalizer Part No.
Kit	(Items listed below)	1		8873
Pump	5-Function, Jacks/1 Slide	1		70296
Jacks	17,000 lbs, 24" Stroke Jacks (Front)	2		70217
Jacks	7,500 lbs, 15" Stroke Jacks (Middle & Rear)	4		7636
Control Panel	Located on road side near front	1		3758SBT
Harness	Connects Control Panel & Pump	1		6150-15
Hose Kit	Complete Set of Hoses	1		70297
Hose, 4'	Pump to Jack, Right Front Top	1	White Solid	2459
Hose, 6'	Pump to Jack, Right Front Bottom	1	White Stripe	2461
Hose, 10'	Tee to RR & RM Jack Top	2	Yellow Solid	2465
Hose, 10'	Tee to RR & RM Jack Bottom	2	Yellow Stripe	2465
Hose, 10'	Tee to LR & LM Jack Top	2	Orange Solid	2465
Hose, 10'	Tee to LR & LM Jack Bottom	2	Orange Stripe	2465
Hose, 10'	Pump to Jack, Left Front Top	1	Brown Solid	2465
Hose, 12'	Pump to Jack, Left Front Bottom	1	Brown Stripe	2467
Hose, 22'	Pump to Tee, Right Rear Top	1	Yellow Solid	2476
Hose, 22'	Pump to Tee, Right Rear Bottom	1	Yellow Stripe	2476
Hose, 28'	Pump to Tee, Left Rear Top	1	Orange Solid	2535
Hose, 28'	Pump to Tee, Left Rear Bottom	1	Orange Stripe	2535
Slide Room 1	Electric	1		
Slide Room 2	EQ 38" Slide Cylinder Only	1		70250
Hose, 28'	Pump to closed end	1	Green Solid	2535
Hose, 32'	Pump to rod end	1	Green Stripe	2482
Bolt Kit	Jacks	1		7870
Fitting Kit	Jacks	1		7871ALAV

Revisions	

2022 KEYSTONE AVALANCHE
312RS

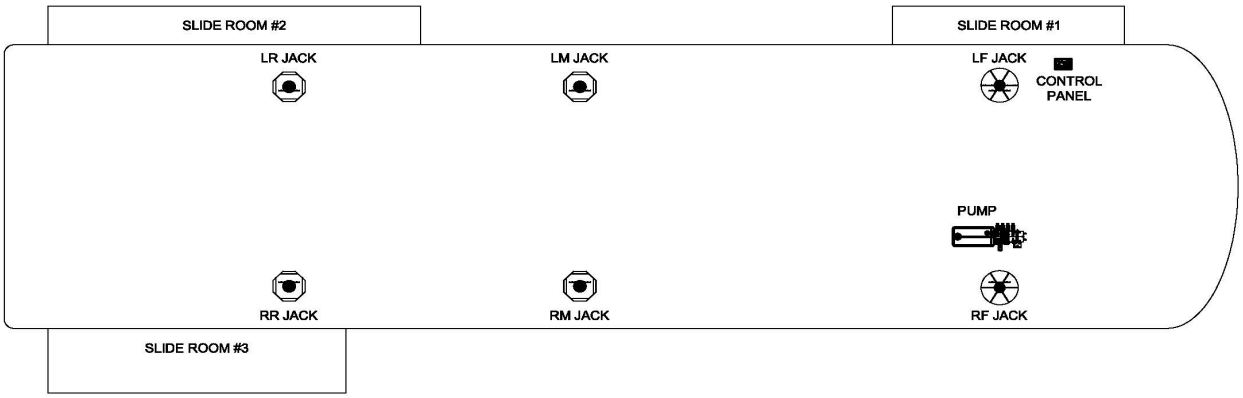

Notes:

Item, Length	Description / Location	Qty	Color	Equalizer Part No.
Kit	(Items listed below)	1		8868
Pump	6-Function, Jacks/2 Slides	1		70254
Jacks	17,000 lbs, 24" Stroke Jacks (Front)	2		70217
Jacks	7,500 lbs, 15" Stroke Jacks (Middle & Rear)	4		7636
Control Panel	Located on road side near front	1		3758SBT
Harness	Connects Control Panel & Pump	1		6150-15
Hose Kit	Complete Set of Hoses	1		70287
Hose, 4'	Pump to Jack, Right Front Top	1	White Solid	2459
Hose, 6'	Pump to Jack, Right Front Bottom	1	White Stripe	2461
Hose, 10'	Tee to RR & RM Jack Top	2	Yellow Solid	2465
Hose, 10'	Tee to RR & RM Jack Bottom	2	Yellow Stripe	2465
Hose, 10'	Tee to LR & LM Jack Top	2	Orange Solid	2465
Hose, 10'	Tee to LR & LM Jack Bottom	2	Orange Stripe	2465
Hose, 10'	Pump to Jack, Left Front Top	1	Brown Solid	2465
Hose, 12'	Pump to Jack, Left Front Bottom	1	Brown Stripe	2467
Hose, 22'	Pump to Tee, Right Rear Top	1	Yellow Solid	2476
Hose, 22'	Pump to Tee, Right Rear Bottom	1	Yellow Stripe	2476
Hose, 28'	Pump to Tee, Left Rear Top	1	Orange Solid	2535
Hose, 28'	Pump to Tee, Left Rear Bottom	1	Orange Stripe	2535
Slide Room 1	Electric	1		
Slide Room 2	EQ 24" Slide Cylinder Only	1		70249
Hose, 24'	Pump to closed end	1	Green Solid	2478
Hose, 26'	Pump to rod end	1	Green Stripe	3018
Slide Room 3	EQ 38" Slide Cylinder Only	1		70250
Hose, 32'	Pump to closed end	1	Purple Solid	2482
Hose, 28'	Pump to rod end	1	Purple Stripe	2535
Bolt Kit	Jacks	1		7870
Fitting Kit	Jacks	1		7871ALAV

Revisions	

2022 KEYSTONE AVALANCHE
322RL

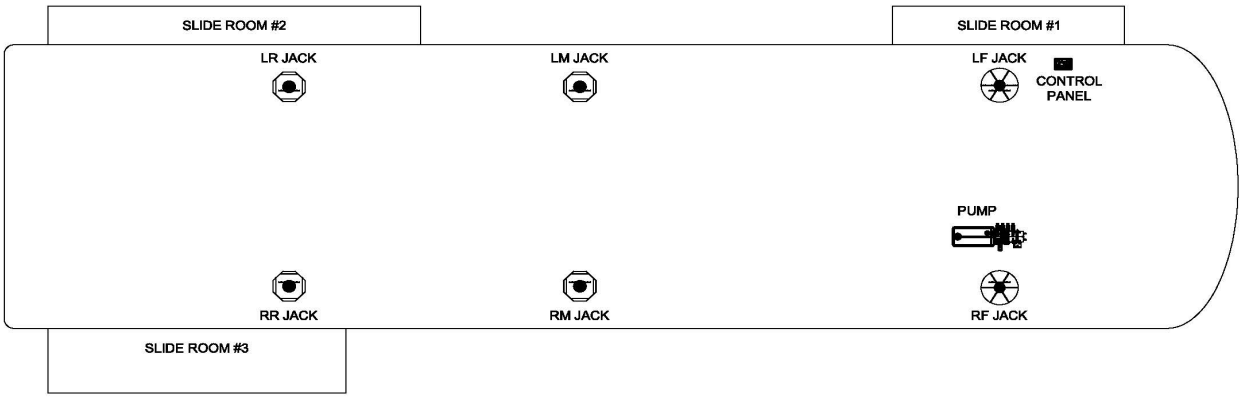

Notes:

Item, Length	Description / Location	Qty	Color	Equalizer Part No.
Kit	(Items listed below)	1		8969
Pump	6-Function, Jacks/2 Slides	1		70254
Jacks	17,000 lbs, 24" Stroke Jacks (Front)	2		70217
Jacks	7,500 lbs, 15" Stroke Jacks (Middle & Rear)	4		7636
Control Panel	Located on road side near front	1		3758SBT
Harness	Connects Control Panel & Pump	1		6150-15
Hose Kit	Complete Set of Hoses	1		70331
Hose, 4'	Pump to Jack, Right Front Top	1	White Solid	2459
Hose, 6'	Pump to Jack, Right Front Bottom	1	White Stripe	2461
Hose, 10'	Tee to RR & RM Jack Top	2	Yellow Solid	2465
Hose, 10'	Tee to RR & RM Jack Bottom	2	Yellow Stripe	2465
Hose, 10'	Tee to LR & LM Jack Top	2	Orange Solid	2465
Hose, 10'	Tee to LR & LM Jack Bottom	2	Orange Stripe	2465
Hose, 10'	Pump to Jack, Left Front Top	1	Brown Solid	2465
Hose, 12'	Pump to Jack, Left Front Bottom	1	Brown Stripe	2467
Hose, 22'	Pump to Tee, Right Rear Top	1	Yellow Solid	2476
Hose, 22'	Pump to Tee, Right Rear Bottom	1	Yellow Stripe	2476
Hose, 28'	Pump to Tee, Left Rear Top	1	Orange Solid	2535
Hose, 28'	Pump to Tee, Left Rear Bottom	1	Orange Stripe	2535
Slide Room 1	Electric	1		
Slide Room 2	EQ 24" Slide Cylinder Only	1		70249
Hose, 36'	Pump to closed end	1	Green Solid	2486
Hose, 38'	Pump to rod end	1	Green Stripe	2488
Slide Room 3	EQ 38" Slide Cylinder Only	1		70250
Hose, 36'	Pump to closed end	1	Purple Solid	2486
Hose, 32'	Pump to rod end	1	Purple Stripe	2482
Bolt Kit	Jacks	1		7870
Fitting Kit	Jacks	1		7871ALAV

Revisions	

2022 KEYSTONE AVALANCHE
338GK

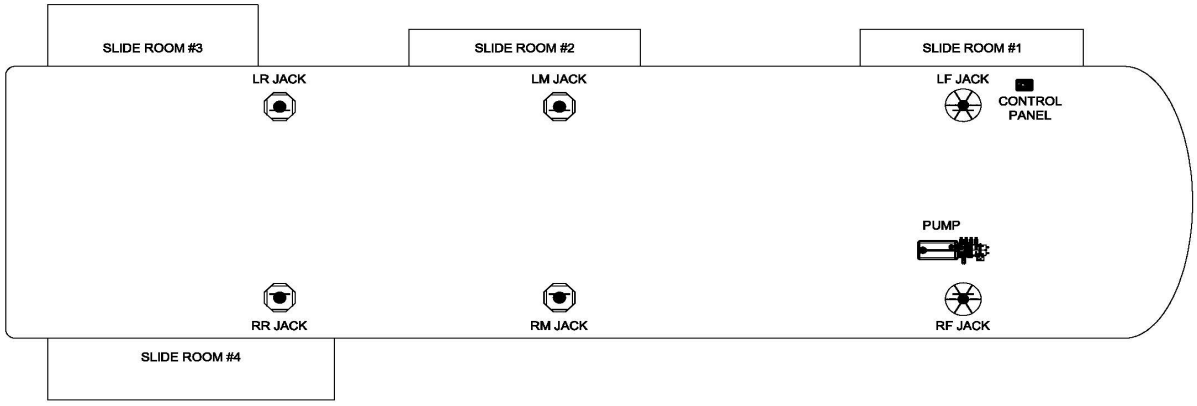

Notes:

Item, Length	Description / Location	Qty	Color	Equalizer Part No.
Kit	(Items listed below)	1		8858
Pump	7-Function, Jacks/3 Slides	1		70248
Jacks	17,000 lbs, 24" Stroke Jacks (Front)	2		70217
Jacks	7,500 lbs, 15" Stroke Jacks (Middle & Rear)	4		7636
Control Panel	Located on road side near front	1		3758SBT
Harness	Connects Control Panel & Pump	1		6150-15
Hose Kit	Complete Set of Hoses	1		70281
Hose, 4'	Pump to Jack, Right Front Top	1	White Solid	2459
Hose, 6'	Pump to Jack, Right Front Bottom	1	White Stripe	2461
Hose, 10'	Tee to RR & RM Jack Top	2	Yellow Solid	2465
Hose, 10'	Tee to RR & RM Jack Bottom	2	Yellow Stripe	2465
Hose, 10'	Tee to LR & LM Jack Top	2	Orange Solid	2465
Hose, 10'	Tee to LR & LM Jack Bottom	2	Orange Stripe	2465
Hose, 10'	Pump to Jack, Left Front Top	1	Brown Solid	2465
Hose, 12'	Pump to Jack, Left Front Bottom	1	Brown Stripe	2467
Hose, 24'	Pump to Tee, Right Rear Top	1	Yellow Solid	2478
Hose, 24'	Pump to Tee, Right Rear Bottom	1	Yellow Stripe	2478
Hose, 30'	Pump to Tee, Left Rear Top	1	Orange Solid	2527
Hose, 30'	Pump to Tee, Left Rear Bottom	1	Orange Stripe	2527
Slide Room 1	Electric			
Slide Room 2	EQ 24" Slide Cylinder Only	1		70249
Hose, 22'	Pump to closed end	1	Green Solid	2476
Hose, 24'	Pump to rod end	1	Green Stripe	2478
Slide Room 3	EQ 38" Slide Cylinder Only	1		70250
Hose, 32'	Pump to closed end	1	Purple Solid	2482
Hose, 36'	Pump to rod end	1	Purple Stripe	2486
Slide Room 4	EQ 38" Slide Cylinder Only	1		70250
Hose, 36'	Pump to closed end	1	Grey Solid	2486
Hose, 32'	Pump to rod end	1	Grey Stripe	2482
Bolt Kit	Jacks	1		7870
Fitting Kit	Jacks	1		7871ALAV

Revisions	

2022 KEYSTONE AVALANCHE
352BH

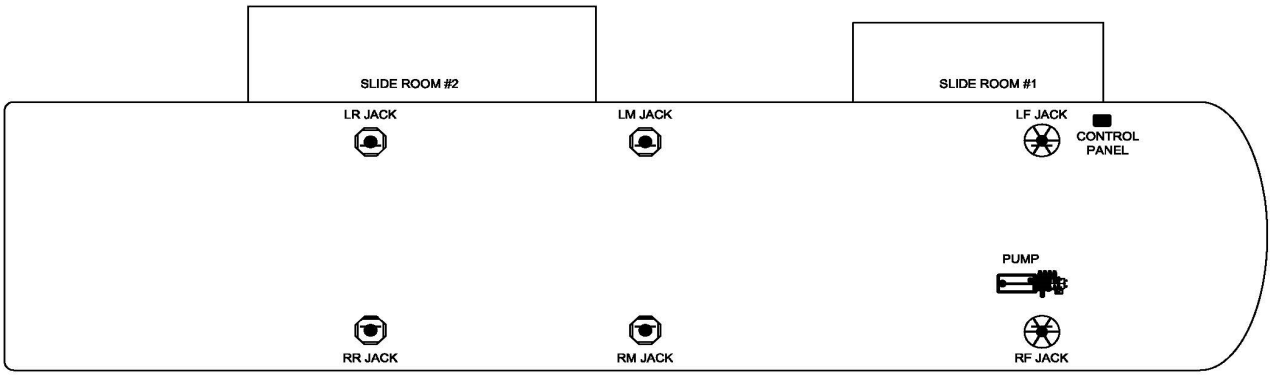

Notes:

Item, Length	Description / Location	Qty	Color	Equalizer Part No.
Kit	(Items listed below)	1		8980
Pump	5-Function, Jacks/1 Slide	1		70296
Jacks	17,000 lbs, 24" Stroke Jacks (Front)	2		70217
Jacks	7,500 lbs, 15" Stroke Jacks (Middle & Rear)	4		7636
Control Panel	Located on road side near front	1		3758SBT
Harness	Connects Control Panel & Pump	1		6150-15
Hose Kit	Complete Set of Hoses	1		70342
Hose, 4'	Pump to Jack, Right Front Top	1	White Solid	2459
Hose, 6'	Pump to Jack, Right Front Bottom	1	White Stripe	2461
Hose, 10'	Tee to RR & RM Jack Top	2	Yellow Solid	2465
Hose, 10'	Tee to RR & RM Jack Bottom	2	Yellow Stripe	2465
Hose, 10'	Tee to LR & LM Jack Top	2	Orange Solid	2465
Hose, 10'	Tee to LR & LM Jack Bottom	2	Orange Stripe	2465
Hose, 10'	Pump to Jack, Left Front Top	1	Brown Solid	2465
Hose, 12'	Pump to Jack, Left Front Bottom	1	Brown Stripe	2467
Hose, 22'	Pump to Tee, Right Rear Top	1	Yellow Solid	2476
Hose, 22'	Pump to Tee, Right Rear Bottom	1	Yellow Stripe	2476
Hose, 28'	Pump to Tee, Left Rear Top	1	Orange Solid	2535
Hose, 28'	Pump to Tee, Left Rear Bottom	1	Orange Stripe	2535
Slide Room 1	Electric	1		
Slide Room 2	EQ 38" Slide Cylinder Only	1		70250
Hose, 24'	Pump to closed end	1	Green Solid	2478
Hose, 28'	Pump to rod end	1	Green Stripe	2535
Bolt Kit	Jacks	1		7870
Fitting Kit	Jacks	1		7871ALAV

Revisions	

2022 KEYSTONE AVALANCHE
353FL

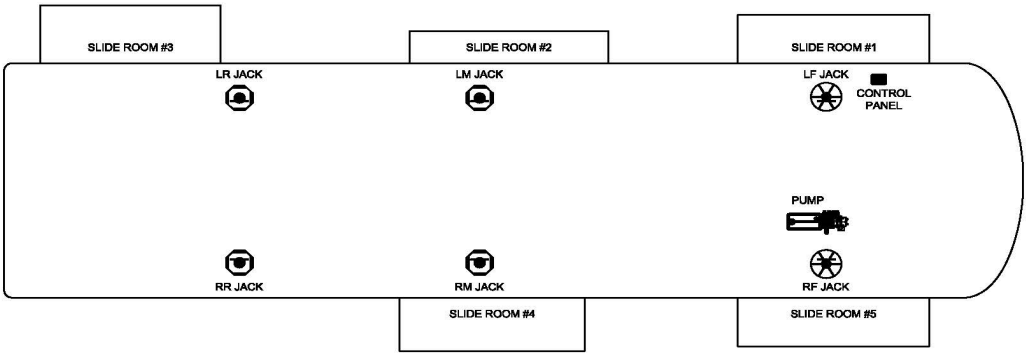

Notes:

Item, Length	Description / Location	Qty	Color	Equalizer Part No.
Kit	(Items listed below)	1		8992
Pump	6-Function, Jacks/2 Slides	1		70254
Jacks	17,000 lbs, 24" Stroke Jacks (Front)	2		70217
Jacks	7,500 lbs, 15" Stroke Jacks (Middle & Rear)	4		7636
Control Panel	Located on road side near front	1		3758SBT
Harness	Connects Control Panel & Pump	1		6150-15
Hose Kit	Complete Set of Hoses	1		70367
Hose, 4'	Pump to Jack, Right Front Top	1	White Solid	2459
Hose, 6'	Pump to Jack, Right Front Bottom	1	White Stripe	2461
Hose, 10'	Tee to RR & RM Jack Top	2	Yellow Solid	2465
Hose, 10'	Tee to RR & RM Jack Bottom	2	Yellow Stripe	2465
Hose, 10'	Tee to LR & LM Jack Top	2	Orange Solid	2465
Hose, 10'	Tee to LR & LM Jack Bottom	2	Orange Stripe	2465
Hose, 10'	Pump to Jack, Left Front Top	1	Brown Solid	2465
Hose, 12'	Pump to Jack, Left Front Bottom	1	Brown Stripe	2467
Hose, 24'	Pump to Tee, Right Rear Top	1	Yellow Solid	2478
Hose, 24'	Pump to Tee, Right Rear Bottom	1	Yellow Stripe	2478
Hose, 30'	Pump to Tee, Left Rear Top	1	Orange Solid	2527
Hose, 30'	Pump to Tee, Left Rear Bottom	1	Orange Stripe	2527
Slide Room 1	Electric			
Slide Room 2	EQ 24" Slide Cylinder Only	1		70249
Hose, 20'	Pump to closed end	1	Green Solid	2475
Hose, 22'	Pump to rod end	1	Green Stripe	2476
Slide Room 3	Electric			
Slide Room 4	EQ 38" Slide Cylinder Only	1		70250
Hose, 26'	Pump to closed end	1	Purple Solid	3018
Hose, 22'	Pump to rod end	1	Purple Stripe	2476
Slide Room 5	Electric			
Bolt Kit	Jacks	1		7870
Fitting Kit	Jacks	1		7871ALAV

Revisions	

2022 KEYSTONE AVALANCHE
372MB

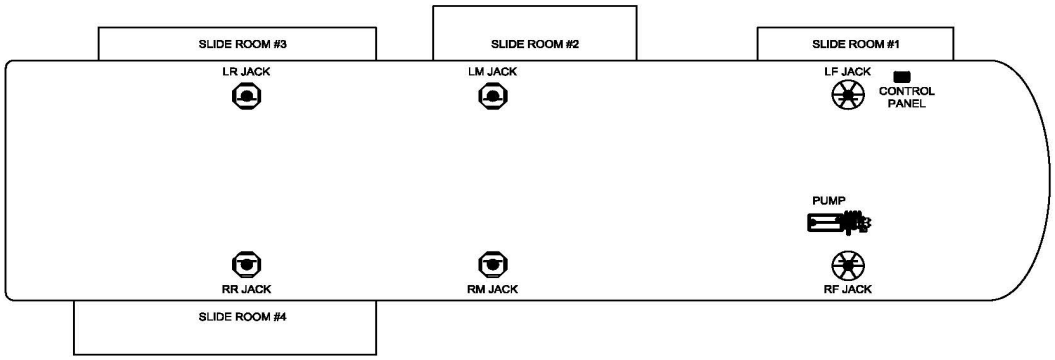

Notes:

Item, Length	Description / Location	Qty	Color	Equalizer Part No.
Kit	(Items listed below)	1		8989
Pump	7-Function, Jacks/3 Slides	1		70248
Jacks	17,000 lbs, 24" Stroke Jacks (Front)	2		70217
Jacks	7,500 lbs, 15" Stroke Jacks (Middle & Rear)	4		7636
Control Panel	Located on road side near front	1		3758SBT
Harness	Connects Control Panel & Pump	1		6150-15
Hose Kit	Complete Set of Hoses	1		70345
Hose, 4'	Pump to Jack, Right Front Top	1	White Solid	2459
Hose, 6'	Pump to Jack, Right Front Bottom	1	White Stripe	2461
Hose, 10'	Tee to RR & RM Jack Top	2	Yellow Solid	2465
Hose, 10'	Tee to RR & RM Jack Bottom	2	Yellow Stripe	2465
Hose, 10'	Tee to LR & LM Jack Top	2	Orange Solid	2465
Hose, 10'	Tee to LR & LM Jack Bottom	2	Orange Stripe	2465
Hose, 10'	Pump to Jack, Left Front Top	1	Brown Solid	2465
Hose, 12'	Pump to Jack, Left Front Bottom	1	Brown Stripe	2467
Hose, 26'	Pump to Tee, Right Rear Top	1	Yellow Solid	3018
Hose, 26'	Pump to Tee, Right Rear Bottom	1	Yellow Stripe	3018
Hose, 32'	Pump to Tee, Left Rear Top	1	Orange Solid	2482
Hose, 32'	Pump to Tee, Left Rear Bottom	1	Orange Stripe	2482
Slide Room 1	Electric			
Slide Room 2	EQ 38" Slide Cylinder Only	1		70250
Hose, 22'	Pump to closed end	1	Green Solid	2476
Hose, 26'	Pump to rod end	1	Green Stripe	3018
Slide Room 3	EQ 24" Slide Cylinder Only	1		70249
Hose, 30'	Pump to closed end	1	Purple Solid	2527
Hose, 32'	Pump to rod end	1	Purple Stripe	2482
Slide Room 4	EQ 38" Slide Cylinder Only	1		70250
Hose, 38'	Pump to closed end	1	Grey Solid	2488
Hose, 34'	Pump to rod end	1	Grey Stripe	2484
Bolt Kit	Jacks	1		7870
Fitting Kit	Jacks	1		7871ALAV

Revisions	

2022 KEYSTONE AVALANCHE
378BH

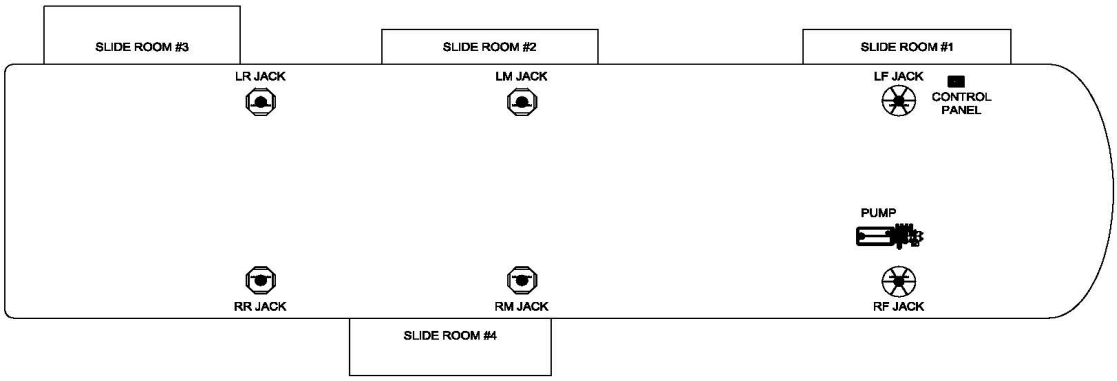

Notes:

Item, Length	Description / Location	Qty	Color	Equalizer Part No.
Kit	(Items listed below)	1		8860
Pump	7-Function, Jacks/3 Slides	1		70248
Jacks	17,000 lbs, 24" Stroke Jacks (Front)	2		70217
Jacks	7,500 lbs, 15" Stroke Jacks (Middle & Rear)	4		7636
Control Panel	Located on road side near front	1		3758SBT
Harness	Connects Control Panel & Pump	1		6150-15
Hose Kit	Complete Set of Hoses	1		70283
Hose, 4'	Pump to Jack, Right Front Top	1	White Solid	2459
Hose, 6'	Pump to Jack, Right Front Bottom	1	White Stripe	2461
Hose, 10'	Tee to RR & RM Jack Top	2	Yellow Solid	2465
Hose, 10'	Tee to RR & RM Jack Bottom	2	Yellow Stripe	2465
Hose, 10'	Tee to LR & LM Jack Top	2	Orange Solid	2465
Hose, 10'	Tee to LR & LM Jack Bottom	2	Orange Stripe	2465
Hose, 10'	Pump to Jack, Left Front Top	1	Brown Solid	2465
Hose, 12'	Pump to Jack, Left Front Bottom	1	Brown Stripe	2467
Hose, 26'	Pump to Tee, Right Rear Top	1	Yellow Solid	3018
Hose, 26'	Pump to Tee, Right Rear Bottom	1	Yellow Stripe	3018
Hose, 32'	Pump to Tee, Left Rear Top	1	Orange Solid	2482
Hose, 32'	Pump to Tee, Left Rear Bottom	1	Orange Stripe	2482
Slide Room 1	Electric			
Slide Room 2	EQ 24" Slide Cylinder Only	1		70249
Hose, 24'	Pump to closed end	1	Green Solid	2478
Hose, 26'	Pump to rod end	1	Green Stripe	3018
Slide Room 3	EQ 38" Slide Cylinder Only	1		70250
Hose, 38'	Pump to closed end	1	Purple Solid	2488
Hose, 42'	Pump to rod end	1	Purple Stripe	3400
Slide Room 4	EQ 38" Slide Cylinder Only	1		70250
Hose, 24'	Pump to closed end	1	Grey Solid	2478
Hose, 20'	Pump to rod end	1	Grey Stripe	2475
Bolt Kit	Jacks	1		7870
Fitting Kit	Jacks	1		7871ALAV

Revisions	

2022 KEYSTONE AVALANCHE
382FL

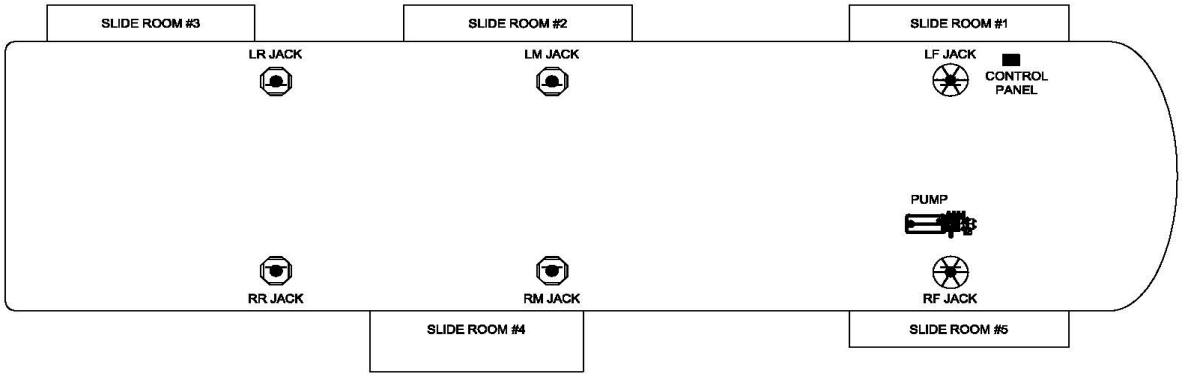

Notes:

Item, Length	Description / Location	Qty	Color	Equalizer Part No.
Kit	(Items listed below)	1		8861
Pump	6-Function, Jacks/2 Slides	1		70254
Jacks	17,000 lbs, 24" Stroke Jacks (Front)	2		70217
Jacks	7,500 lbs, 15" Stroke Jacks (Middle & Rear)	4		7636
Control Panel	Located on road side near front	1		3758SBT
Harness	Connects Control Panel & Pump	1		6150-15
Hose Kit	Complete Set of Hoses	1		70255
Hose, 4'	Pump to Jack, Right Front Top	1	White Solid	2459
Hose, 6'	Pump to Jack, Right Front Bottom	1	White Stripe	2461
Hose, 10'	Tee to RR & RM Jack Top	2	Yellow Solid	2465
Hose, 10'	Tee to RR & RM Jack Bottom	2	Yellow Stripe	2465
Hose, 10'	Tee to LR & LM Jack Top	2	Orange Solid	2465
Hose, 10'	Tee to LR & LM Jack Bottom	2	Orange Stripe	2465
Hose, 10'	Pump to Jack, Left Front Top	1	Brown Solid	2465
Hose, 12'	Pump to Jack, Left Front Bottom	1	Brown Stripe	2467
Hose, 26'	Pump to Tee, Right Rear Top	1	Yellow Solid	3018
Hose, 26'	Pump to Tee, Right Rear Bottom	1	Yellow Stripe	3018
Hose, 32'	Pump to Tee, Left Rear Top	1	Orange Solid	2482
Hose, 32'	Pump to Tee, Left Rear Bottom	1	Orange Stripe	2482
Slide Room 1	Electric			
Slide Room 2	EQ 24" Slide Cylinder Only	1		70249
Hose, 24'	Pump to closed end	1	Green Solid	2478
Hose, 26'	Pump to rod end	1	Green Stripe	3018
Slide Room 3	Electric			
Slide Room 4	EQ 38" Slide Cylinder Only	1		70250
Hose, 24'	Pump to closed end	1	Purple Solid	2478
Hose, 20'	Pump to rod end	1	Purple Stripe	2475
Slide Room 5	Electric			
Bolt Kit	Jacks	1		7870
Fitting Kit	Jacks	1		7871ALAV

Revisions	

2022 KEYSTONE AVALANCHE
390DS

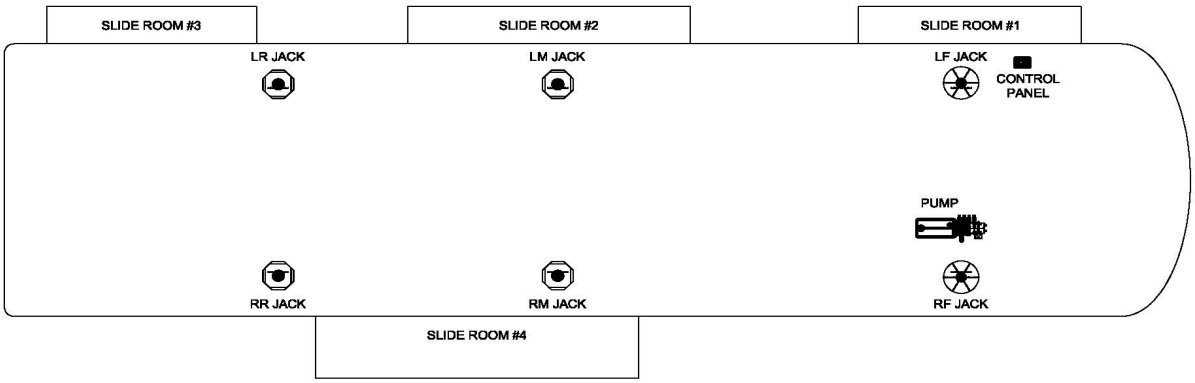

Notes:

Item, Length	Description / Location	Qty	Color	Equalizer Part No.
Kit	(Items listed below)	1		8970
Pump	6-Function, Jacks/2 Slides	1		70254
Jacks	17,000 lbs, 24" Stroke Jacks (Front)	2		70217
Jacks	7,500 lbs, 15" Stroke Jacks (Middle & Rear)	4		7636
Control Panel	Located on road side near front	1		3758SBT
Harness	Connects Control Panel & Pump	1		6150-15
Hose Kit	Complete Set of Hoses	1		70332
Hose, 4'	Pump to Jack, Right Front Top	1	White Solid	2459
Hose, 6'	Pump to Jack, Right Front Bottom	1	White Stripe	2461
Hose, 10'	Tee to RR & RM Jack Top	2	Yellow Solid	2465
Hose, 10'	Tee to RR & RM Jack Bottom	2	Yellow Stripe	2465
Hose, 10'	Tee to LR & LM Jack Top	2	Orange Solid	2465
Hose, 10'	Tee to LR & LM Jack Bottom	2	Orange Stripe	2465
Hose, 10'	Pump to Jack, Left Front Top	1	Brown Solid	2465
Hose, 12'	Pump to Jack, Left Front Bottom	1	Brown Stripe	2467
Hose, 26'	Pump to Tee, Right Rear Top	1	Yellow Solid	3018
Hose, 26'	Pump to Tee, Right Rear Bottom	1	Yellow Stripe	3018
Hose, 32'	Pump to Tee, Left Rear Top	1	Orange Solid	2482
Hose, 32'	Pump to Tee, Left Rear Bottom	1	Orange Stripe	2482
Slide Room 1	Electric			
Slide Room 2	EQ 24" Slide Cylinder Only	1		70249
Hose, 24'	Pump to closed end	1	Green Solid	2478
Hose, 26'	Pump to rod end	1	Green Stripe	3018
Slide Room 3	Electric			
Slide Room 4	EQ 38" Slide Cylinder Only	1		70250
Hose, 30'	Pump to rod end	1	Purple Stripe	2527
Hose, 34'	Pump to closed end	1	Purple Solid	2484
Bolt Kit	Jacks	1		7870
Fitting Kit	Jacks	1		7871ALAV

Revisions	

7636 PARTS LIST		
PART#	DESCRIPTION	QUAN
1383	SCREW-3/4-10 X 1 1/4 FHSCS Z	1
1683	FOOT-SL 10 X 10	1
1800	CUSHION-DAMPENING RING-SMALL/THICK	1
2943	CYLINDER-2 X 15 SL	1

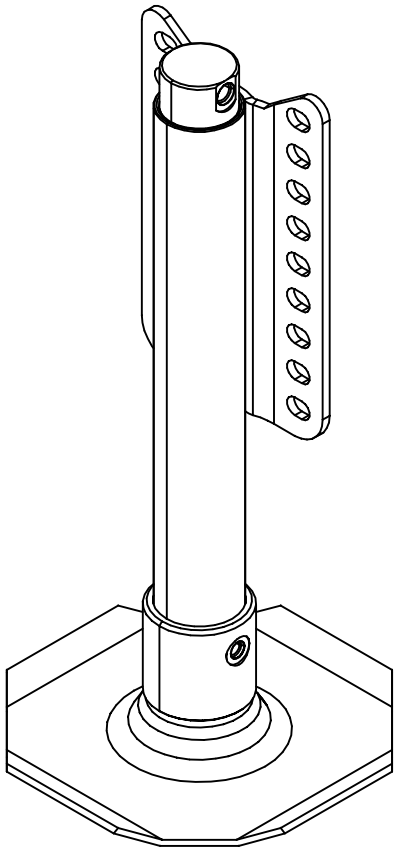

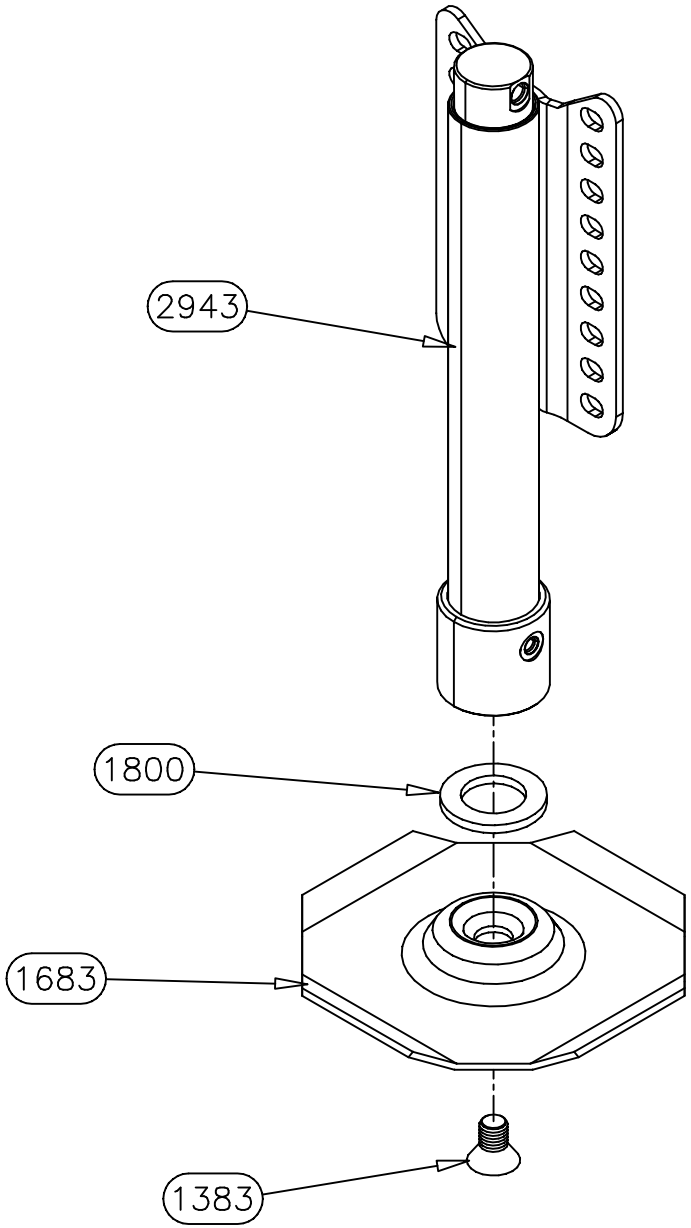

Equalizer 55169 COUNTY ROAD 3 ELKHART, IN 46515

NOTICE – This drawing, including principles of design, is the property of Days Corporation, Elkhart, Indiana, with the agreement that it is not to be reproduced, copied, or loaned in any manner that may constitute a detriment directly or indirectly to Days Corporation. Acceptance of this will be construed as an agreement of the above.

#	REVISIONS	BY:	DATE:
A	ADDED NEW FOOT DESIGN	SJ	9/10/10
B	CHANGED TO MONARCH CYLIDNER	SJ	8/28/17

UNLESS OTHERWISE SPECIFIED:
TOLERANCES:
.XXX ± 0.010
.XX ± 0.010
.X ± 0.030
ANG. ± 1/2°
REMOVE ALL BURRS AND SHARP EDGES .015 MAX

TITLE MH 15 SL LEG ASSEMBLY			USED ON: MOTOR HOME LEVELING
SIZE A	SCALE 1: 1	MATERIAL AS NOTED	
DRW BY: SJ	DATE: 6/4/09	PART NAME: MH 15 SL LEG ASSEMBLY	
APP'D BY –	DATE: –	PAGE: 1 OF 2	DWG NO.: 7636 REV: B

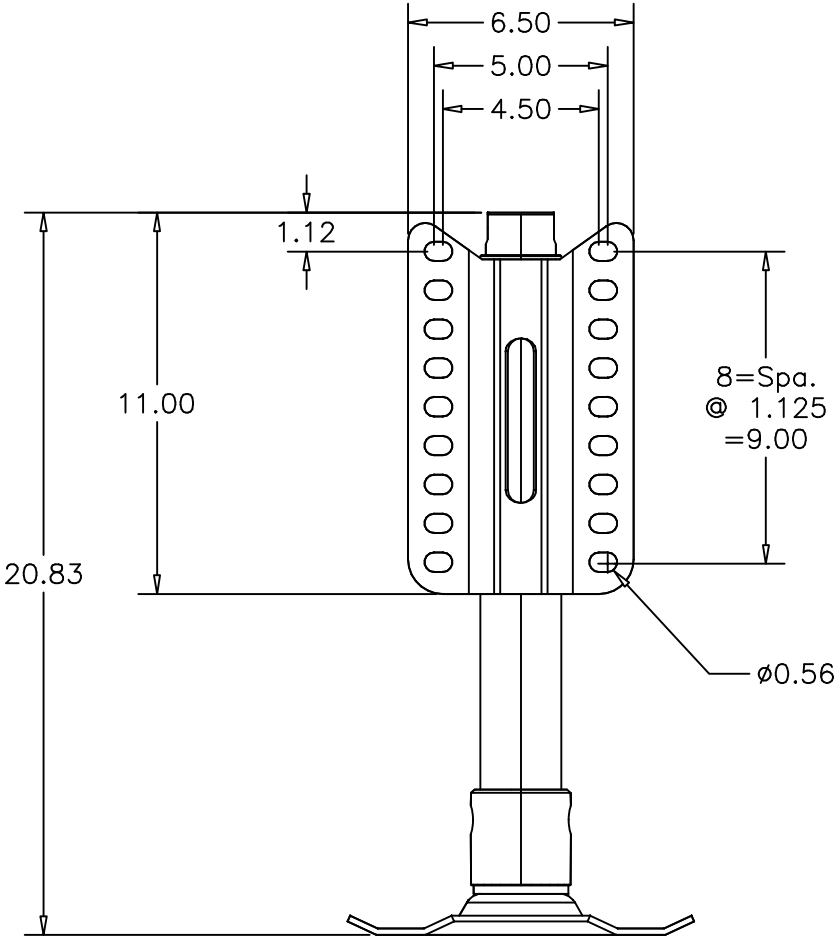

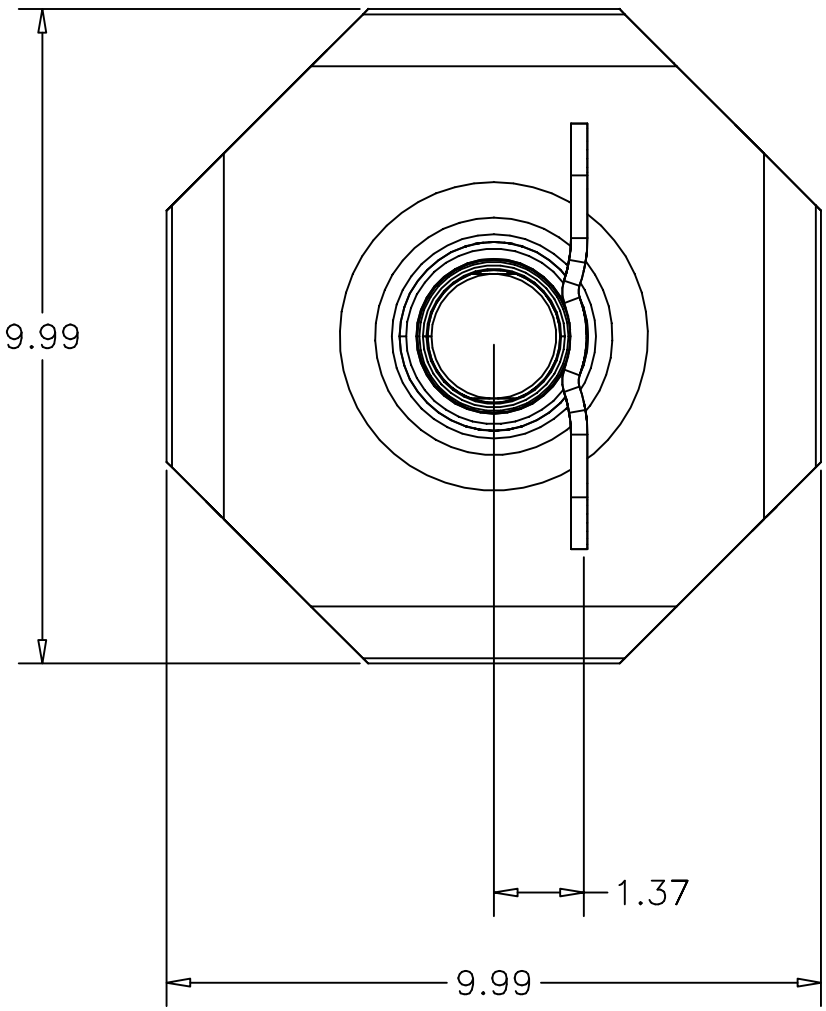

Equalizer 55169 COUNTY ROAD 3
ELKHART, IN 46515

NOTICE – This drawing, including principles of design, is the property of Days Corporation, Elkhart, Indiana, with the agreement that it is not to be reproduced, copied, or loaned in any manner that may constitute a detriment directly or indirectly to Days Corporation. Acceptance of this will be construed as an agreement of the above.

#	REVISIONS	BY:	DATE:
A	ADDED NEW FOOT DESIGN	SJ	9/10/10
B	CHANGED TO MONARCH CYLIDNER	SJ	8/28/17

UNLESS OTHERWISE SPECIFIED:
TOLERANCES:
.XXX ± 0.010
.XX ± 0.010
.X ± 0.030
ANG. ± 1/2°
REMOVE ALL BURRS AND SHARP EDGES .015 MAX

TITLE: MH 15 SL LEG ASSEMBLY			USED ON: MOTOR HOME LEVELING
SIZE: A	SCALE: 1: 1	MATERIAL: AS NOTED	
DRW BY: SJ	DATE: 6/4/09	PART NAME: MH 15 SL LEG ASSEMBLY	
APP'D BY: –	DATE: –	PAGE: 2 OF 2	DWG NO.: 7636	REV: B

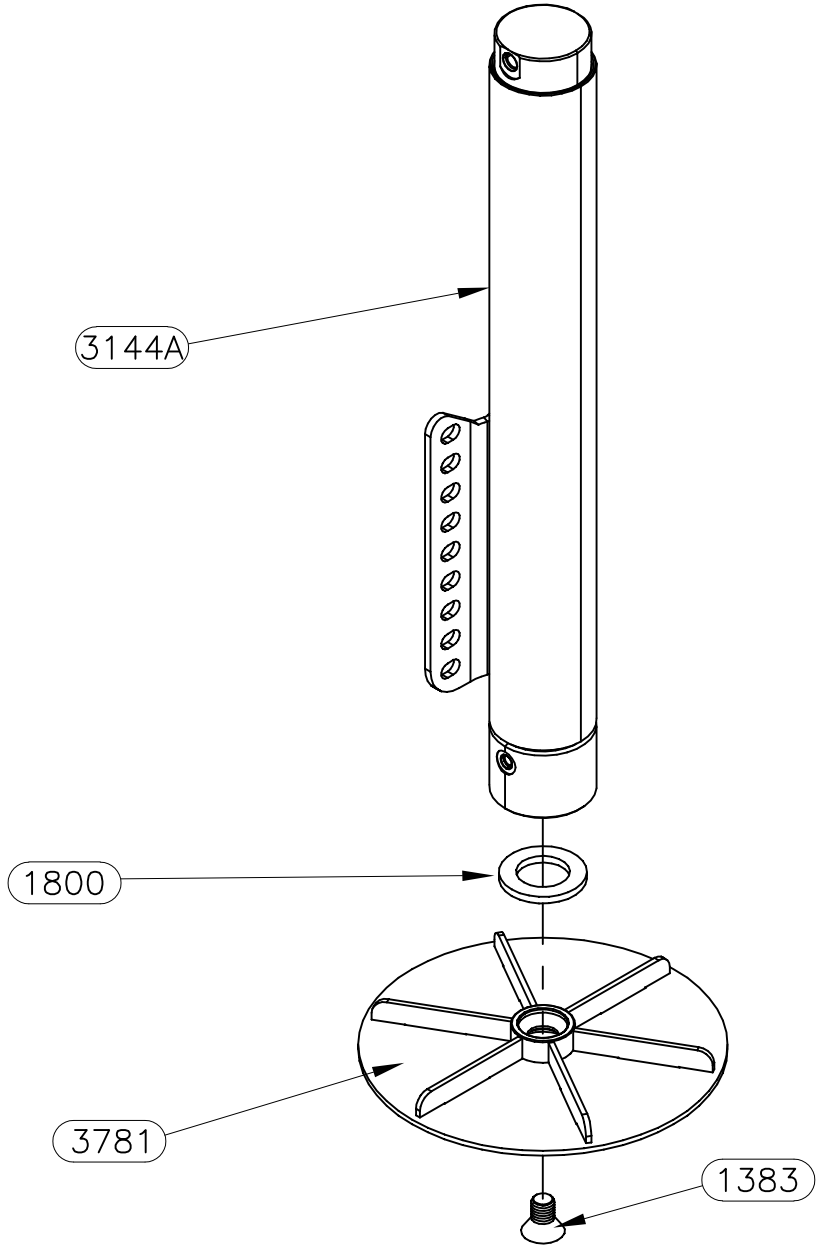

PART #	DESCRIPTION	QUAN
1383	BOLT–3/4–10 X 1 1/4 FHSCS	1
1800	CUSHION–DAMPENING RING–SMALL THICK	1
3144A	CYLINDER–3 X 24 X 1.5 MH DP FIXED	1
3781	FOOT–SL 12" ROUND (1 1/2" ROD)	1

Equalizer 55169 COUNTY ROAD 3
ELKHART, IN 46515

NOTICE – This drawing, including principles of design, is the property of Days Corporation, Elkhart, Indiana, with the agreement that it is not to be reproduced, copied, or loaned in any manner that may constitute a detriment directly or indirectly to Days Corporation. Acceptance of this will be construed as an agreement of the above.

#	REVISIONS	BY:	DATE:

UNLESS OTHERWISE SPECIFIED:
TOLERANCES:
.XXX ± 0.010
.XX ± 0.010
.X ± 0.030
ANG. ± 1/2°
REMOVE ALL BURRS AND SHARP EDGES .015 MAX

TITLE: SL 24 LEG ASSEMBLY			USED ON: TRAILER LEVELING SYSTEMS	
SIZE: A	SCALE: N/A	MATERIAL: PER ITEM LIST		
DRW BY: SJ	DATE: 5/15/19		PART NAME: SL 24 A–17K	
APP'D BY: –	DATE: –		PAGE: 1 OF 2	DWG NO.: 70217	REV: –

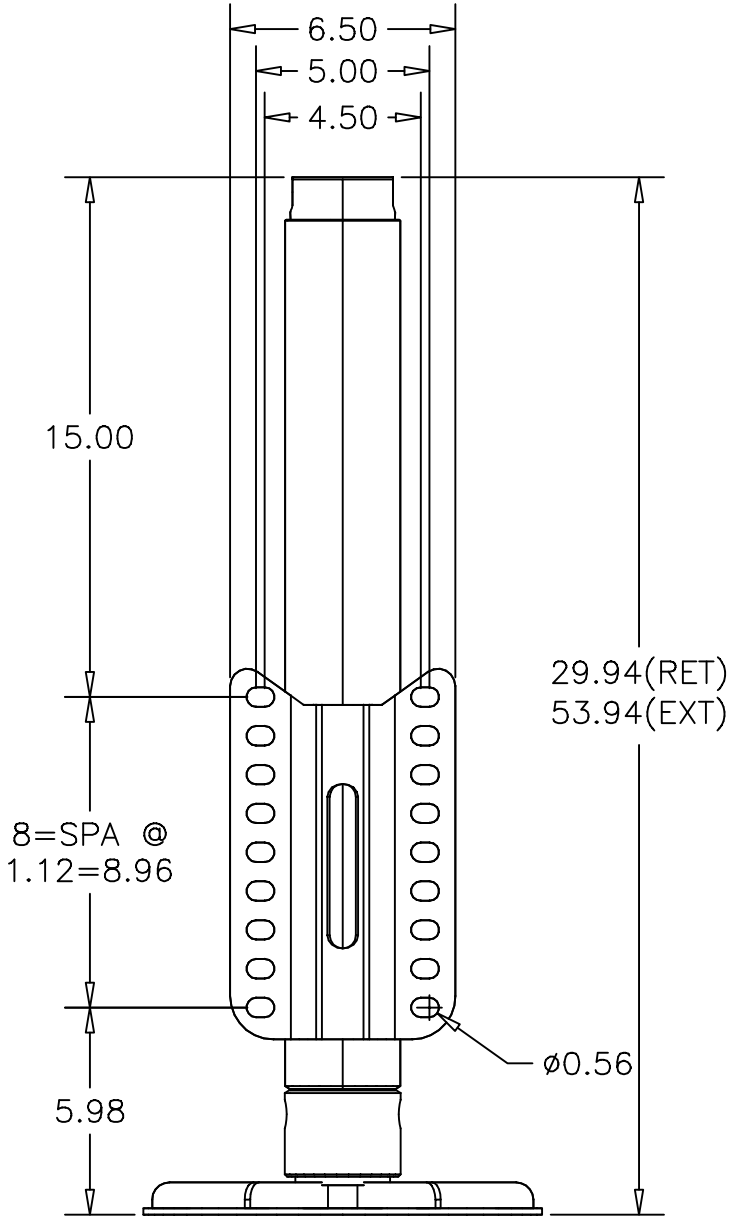

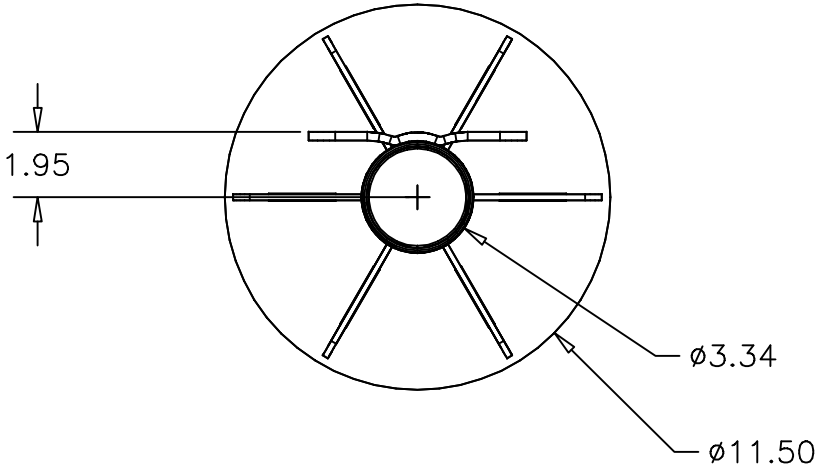

Equalizer
55169 COUNTY ROAD 3
ELKHART, IN 46515

NOTICE – This drawing, including principles of design, is the property of Days Corporation, Elkhart, Indiana, with the agreement that it is not to be reproduced, copied, or loaned in any manner that may constitute a detriment directly or indirectly to Days Corporation. Acceptance of this will be construed as an agreement of the above.

#	REVISIONS	BY:	DATE:

UNLESS OTHERWISE SPECIFIED:
TOLERANCES:
.XXX ± 0.010
.XX ± 0.010
.X ± 0.030
ANG. ± 1/2°
REMOVE ALL BURRS AND SHARP EDGES .015 MAX

TITLE: SL 24 LEG ASSEMBLY			USED ON: TRAILER LEVELING SYSTEMS
SIZE: A	SCALE: N/A	MATERIAL: PER ITEM LIST	
DRW BY: SJ	DATE: 5/15/19	PART NAME: SL 24 A-17K	
APP'D BY: –	DATE: –	PAGE: 2 OF 2	DWG NO.: 70217	REV: –

PART NUMBER	PART NAME	QTY.
1124	#4 JIC X #4 O-RING MALE 90	7
1187	SCREW-3/8-16 X 1 1/4 CUP PT SSS	2
1278	NUT-3/8 FLANGE	2
1395	PLATE-PUMP MOUNT-CQ	1
1724	FITTING-#4 JIC X #4 O-RING X 45	7
1735	FITTING-DF04-1/4 DIAG. TIP	2
1900DD	NUT-5/16"-18 FLANGE LOCK	2
1988	SCREW-5/16-18 X 2 3/4 SSS CUP POINT	2
2042	NUT-5/16-18 HEX ZINC	1
2047	SWITCH-PRESSURE SWITCH 1200 PSI	1
2128	PLUG-#4 SOCKET HEAD ORING	4
2417	PLUG-#8 SOCKET HEAD O-RING	2
2542K	RESERVOIR-KIT	1
2542KS	PUMP-BIROTATE 8 QT.-KS	1
2757	MANIFOLD- BIROT 8 FUNC COMPACT	1
2994	CONTACTOR-REVERSING	1
3073	VALVE-DELTROL	7
3074	COIL-DELTROL	7
3330	CAP-FILL-3195KS-3200KS-3201KS	1
3713	MOTOR-2542KS	1
6309	HARNESS, 8 FUNC BR 3 IN CONTACTOR-TRL	1
6572C	HARNESS, 10" POWER AND GROUND FEED CONT.	1
6652BR	HARNESS, 8 FUNC PUMP GROUND LEAD BIROT	1

NOTE:
PARTS 2542K, 2994, 3330, & 3713 ARE INCLUDED IN PART 2542KS AS AN ASSEMBLY.
PARTS 6309, 6572C, & 6652BR ARE NOT SHOWN.

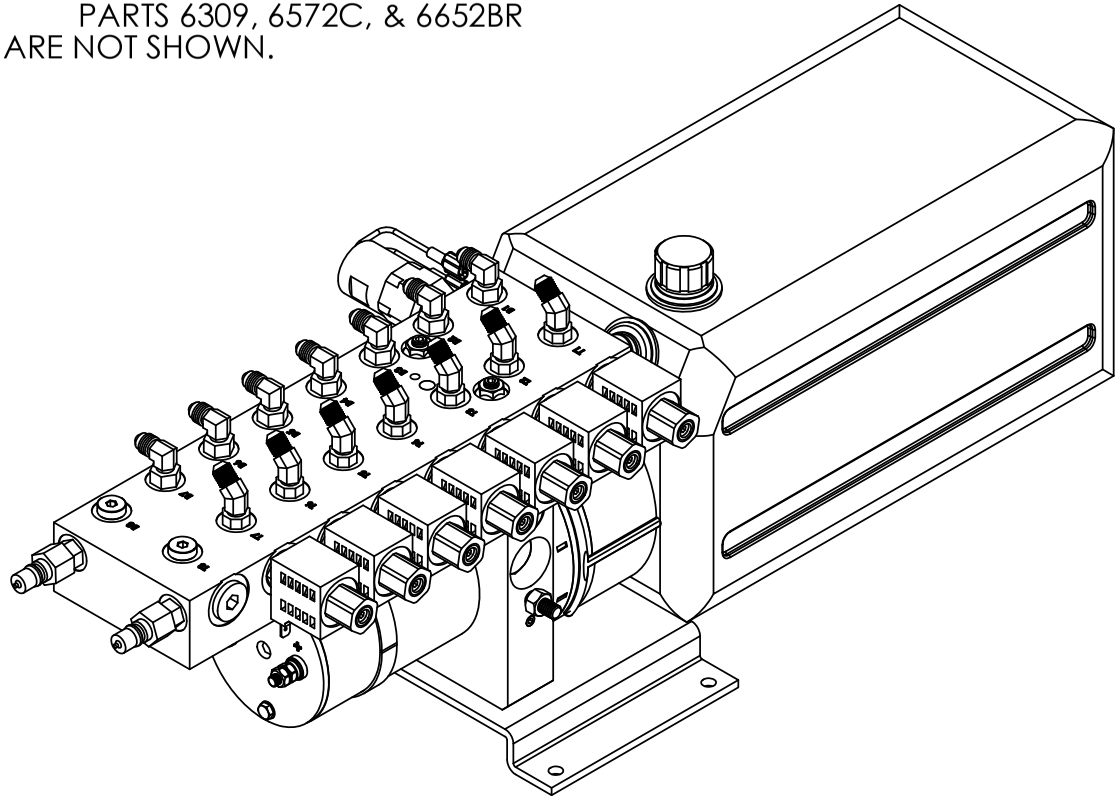

Warranty authorization must come directly from Equalizer Systems. (800) 846-9659.

REV.	REVISIONS	DATE:	BY:
A	1395 ROTATED 180 DEGREES. 1735 CHANGED TO NEW PIECE. 2047 ATTACHES IN NEW LOCATION. STUD AND NUT USED TO ATTACH MANIFOLD TO PUMP	11/6/2020	GSG

EQUALIZER SYSTEMS
A DAYS COMPANY

THE INFORMATION CONTAINED IN THIS DRAWING IS THE SOLE PROPERTY OF DAYS CORPORATION, ELKHART, IN. ANY REPRODUCTION IN PART OR AS A WHOLE WITHOUT THE WRITTEN PERMISSION OF DAYS CORPORATION, ELKHART, IN. IS PROHIBITED.

TITLE: 7 FUNC. BIROT. PUMP ASSEMBLY			USED ON: KEYSTONE
SIZE: A	SCALE: 1:4	MATERIAL:	
DRAWN BY: GSG	DATE: 11/6/2020	PART NAME: PUMP & MAN 7 FUNC BIROT-CON-TRL	
APP'D BY:	DATE:	PAGE: 1 OF 5	DWG NO: 70248 / REV: A

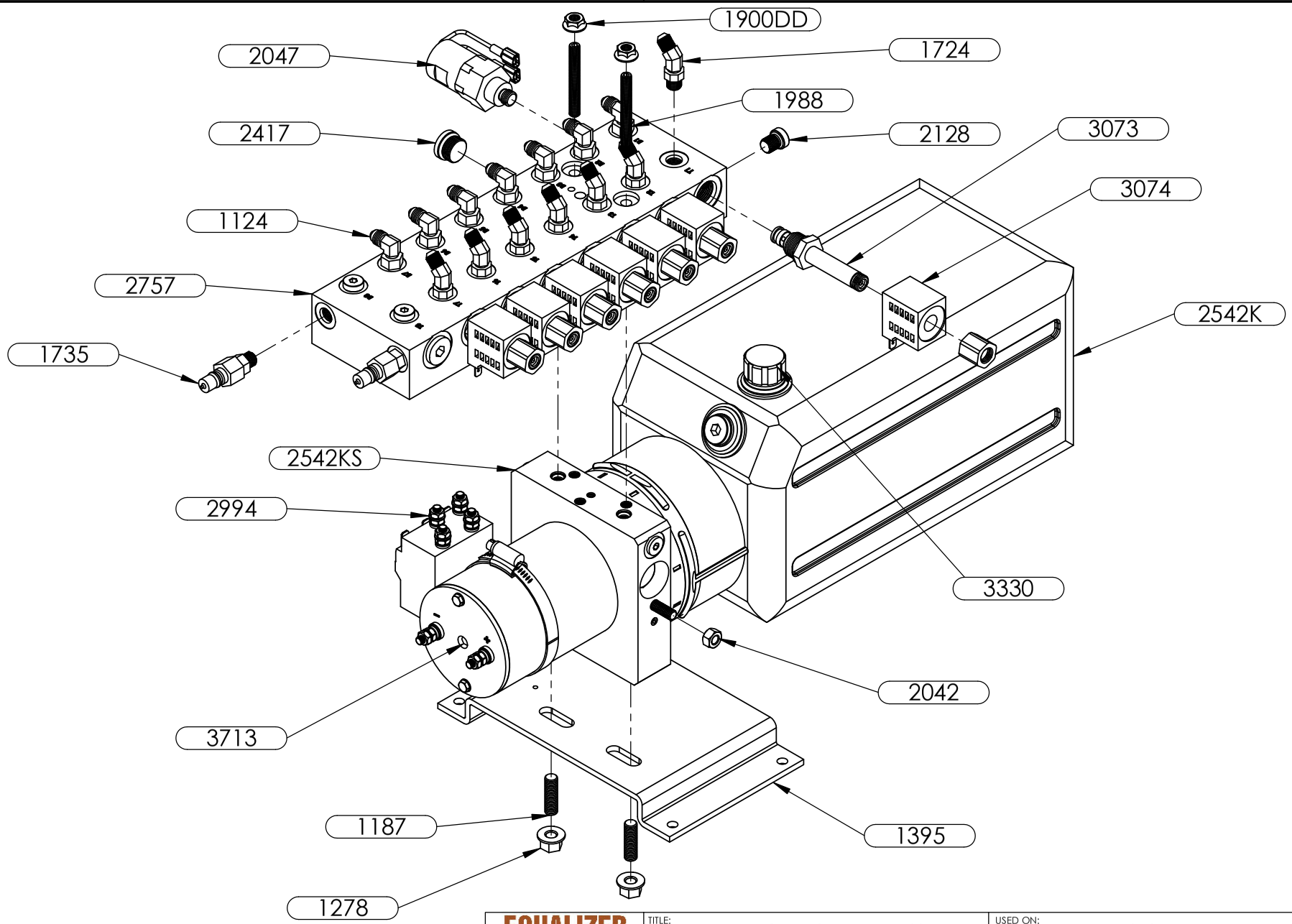

EQUALIZER SYSTEMS
A DAYS COMPANY

THE INFORMATION CONTAINED IN THIS DRAWING IS THE SOLE PROPERTY OF DAYS CORPORATION, ELKHART, IN. ANY REPRODUCTION IN PART OR AS A WHOLE WITHOUT THE WRITTEN PERMISSION OF DAYS CORPORATION, ELKHART, IN. IS PROHIBITED.

TITLE: 7 FUNC. BIROT. PUMP ASSEMBLY			USED ON: KEYSTONE
SIZE: A	SCALE: 1:4	MATERIAL:	
DRAWN BY: GSG	DATE: 11/6/2020	PART NAME: PUMP & MAN 7 FUNC BIROT-CON-TRL	
APP'D BY:	DATE:	PAGE: 2 OF 5	DWG NO: 70248 / REV: A

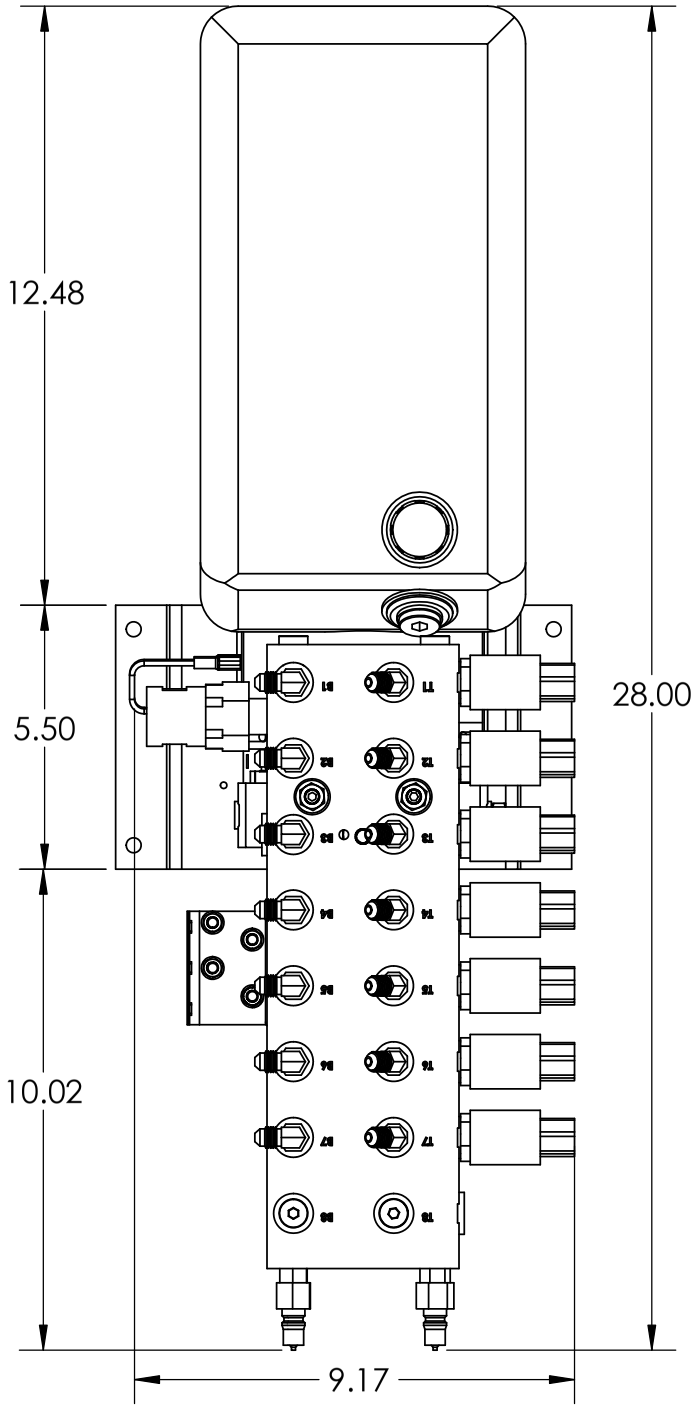

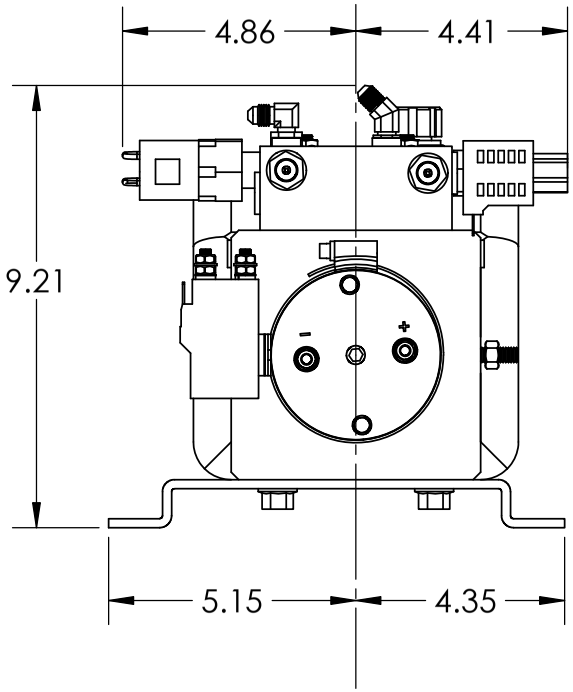

EQUALIZER SYSTEMS
A DAYS COMPANY

THE INFORMATION CONTAINED IN THIS DRAWING IS THE SOLE PROPERTY OF DAYS CORPORATION, ELKHART, IN. ANY REPRODUCTION IN PART OR AS A WHOLE WITHOUT THE WRITTEN PERMISSION OF DAYS CORPORATION, ELKHART, IN. IS PROHIBITED.

TITLE: 7 FUNC. BIROT. PUMP ASSEMBLY			USED ON: KEYSTONE
SIZE: A	SCALE: 1:4	MATERIAL:	
DRAWN BY: GSG	DATE: 11/6/2020	PART NAME: PUMP & MAN 7 FUNC BIROT-CON-TRL	
APP'D BY:	DATE:	PAGE: 3 OF 5	DWG NO: 70248 / REV: A

HYDRAULIC HOSE CONNECTIONS
70248 PUMP

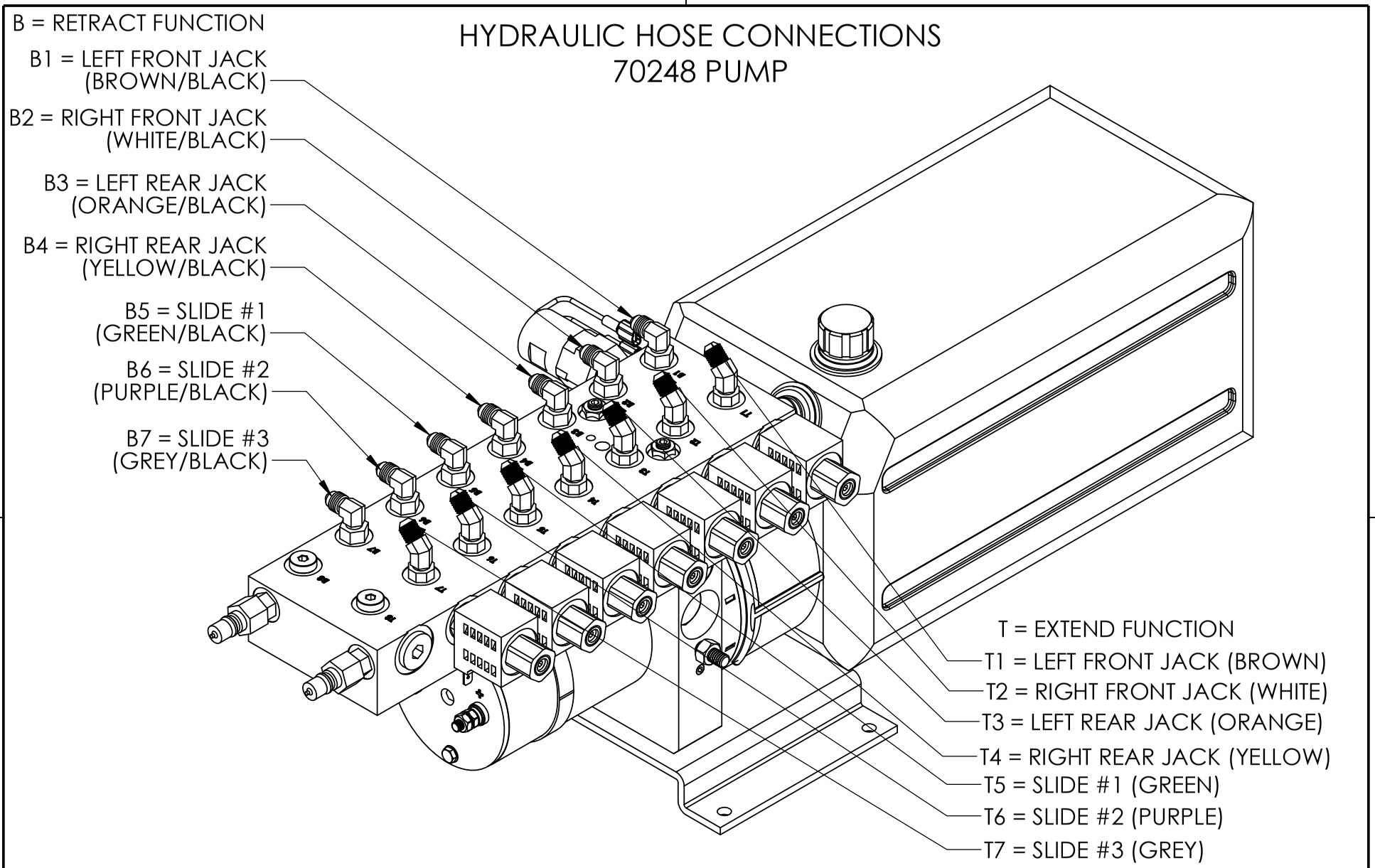

EQUALIZER SYSTEMS
A DAYS COMPANY

THE INFORMATION CONTAINED IN THIS DRAWING IS THE SOLE PROPERTY OF DAYS CORPORATION, ELKHART, IN. ANY REPRODUCTION IN PART OR AS A WHOLE WITHOUT THE WRITTEN PERMISSION OF DAYS CORPORATION, ELKHART, IN. IS PROHIBITED.

TITLE: 7 FUNC. BIROT. PUMP ASSEMBLY			USED ON: KEYSTONE
SIZE: A	SCALE: 1:3	MATERIAL:	
DRAWN BY: GSG	DATE: 11/6/2020	PART NAME: PUMP & MAN 7 FUNC BIROT-CON-TRL	
APP'D BY:	DATE:	PAGE: 4 OF 5	DWG NO: 70248 / REV: A

70248
PUMP WIRING

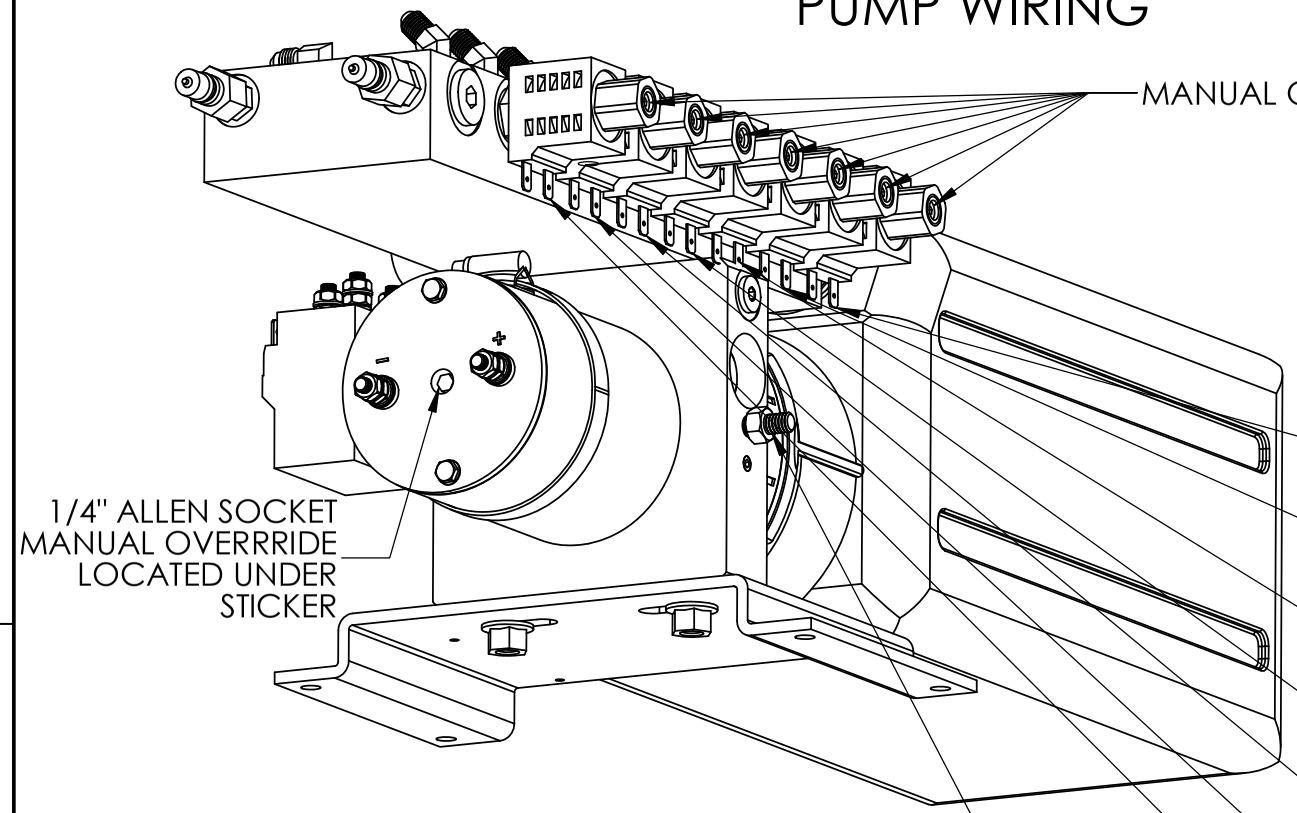

NOTE:
The pump harness has a red/black wire that are not used and should be tied back out of the way.

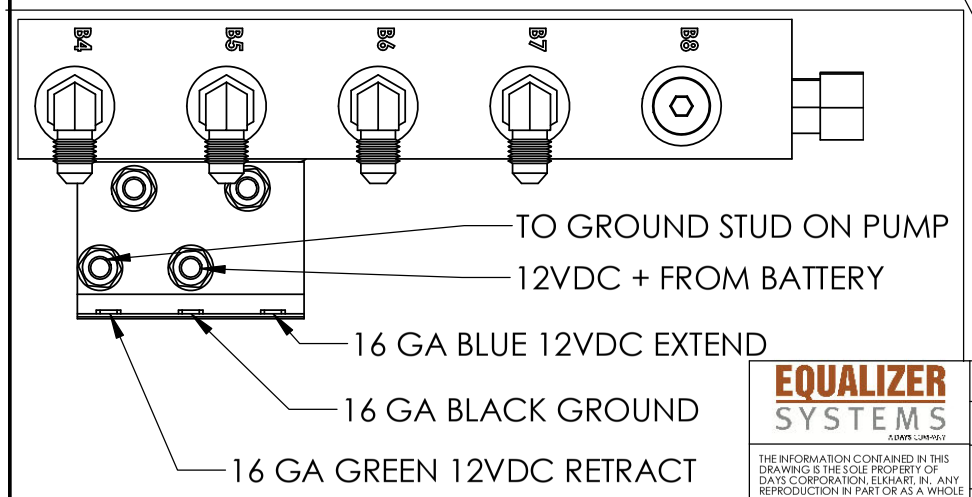

EQUALIZER SYSTEMS
A DAYS COMPANY

THE INFORMATION CONTAINED IN THIS DRAWING IS THE SOLE PROPERTY OF DAYS CORPORATION, ELKHART, IN. ANY REPRODUCTION IN PART OR AS A WHOLE WITHOUT THE WRITTEN PERMISSION OF DAYS CORPORATION, ELKHART, IN. IS PROHIBITED.

TITLE: 7 FUNC. BIROT. PUMP ASSEMBLY			USED ON: KEYSTONE
SIZE: A	SCALE: 1:3	MATERIAL:	
DRAWN BY: GSG	DATE: 11/6/2020	PART NAME: PUMP & MAN 7 FUNC BIROT-CON-TRL	
APP'D BY:	DATE:	PAGE: 5 OF 5	DWG NO: 70248 — REV: A

DRAWING NUMBER	PART NAME	QTY.
1124	#4 JIC X #4 O-RING MALE 90	6
1187	SCREW-3/8-16 X 1 1/4 CUP PT SSS	2
1278	NUT-3/8 FLANGE	2
1395	PLATE-PUMP MOUNT-CQ	1
1724	FITTING-#4 JIC X #4 O-RING X 45	6
1735	FITTING-DF04-1/4 DIAG. TIP	2
1900DD	NUT-5/16"-18 FLANGE LOCK	2
1988	SCREW-5/16-18 X 2 3/4 SSS CUP POINT	2
2042	NUT-5/16-18 HEX ZINC	1
2047	SWITCH-PRESSURE SWITCH 1200 PSI	1
2128	PLUG-#4 SOCKET HEAD ORING	2
2417	PLUG-#8 SOCKET HEAD O-RING	1
2542K	RESERVOIR-KIT	1
2542KS	PUMP-BIROTATE 8 QT.-KS	1
2742	MANIFOLD- BIROT 6 FUNC COMPACT	1
2994	CONTACTOR-REVERSING	1
3073	VALVE-DELTROL	6
3074	COIL-DELTROL	6
3330	CAP-FILL-3195KS-3200KS-3201KS	1
3713	MOTOR-2542KS	1
6309	HARNESS, PUMP 8 FUNC BR-CONT.-TRL	1
6572C	HARNESS, 10" POWER AND GND FEED-CONT.	1
6651BR	HARNESS, 7 FUNC PUMP GROUND LEAD BIROT	1

NOTE:
PARTS 2542K, 2994, 3330, & 3713 ARE INCLUDED IN PART 2542KS AS AN ASSEMBLY.
PARTS 6309, 6572C, & 6651BR ARE NOT SHOWN.

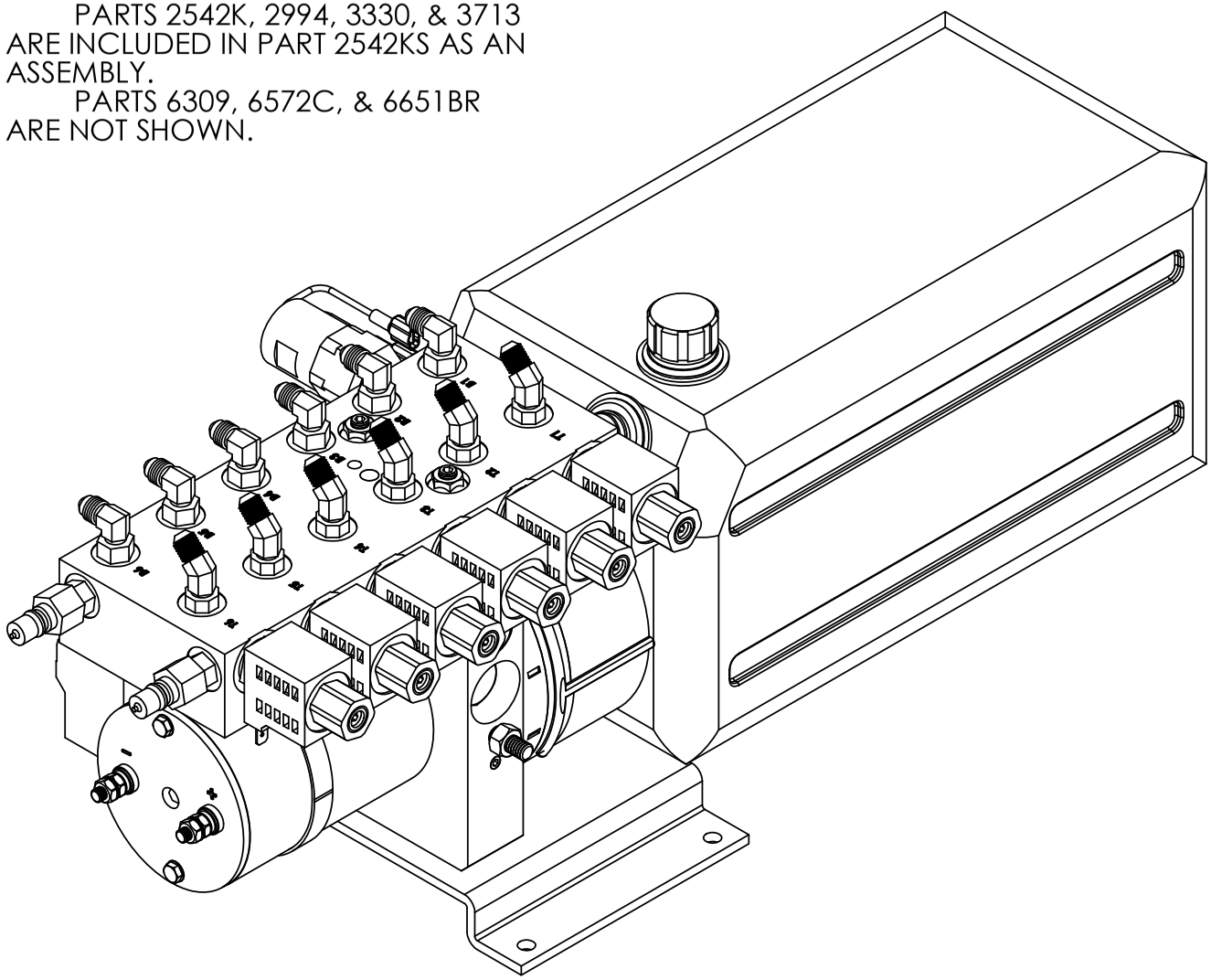

Warranty authorization must come directly from Equalizer Systems. (800) 846-9659.

REV.	REVISIONS	DATE:	BY:
A	1395 ROTATED 180 DEGREES. 1735 CHANGED TO NEW PIECE. 2047 ATTACHES IN NEW LOACTION.	10/30/2020	GSG

EQUALIZER SYSTEMS
A DAYS COMPANY

THE INFORMATION CONTAINED IN THIS DRAWING IS THE SOLE PROPERTY OF DAYS CORPORATION, ELKHART, IN. ANY REPRODUCTION IN PART OR AS A WHOLE WITHOUT THE WRITTEN PERMISSION OF DAYS CORPORATION, ELKHART, IN. IS PROHIBITED.

TITLE: 6 FUNC. BIROT. PUMP ASSEMBLY			USED ON: KEYSTONE
SIZE: A	SCALE: 1:3	MATERIAL:	
DRAWN BY: GSG	DATE: 10/30/2020	PART NAME: PUMP & MAN 6 FUNC BIROT-CON-TRL	
APP'D BY:	DATE:	PAGE: 1 OF 5	DWG NO: 70254 — REV: A

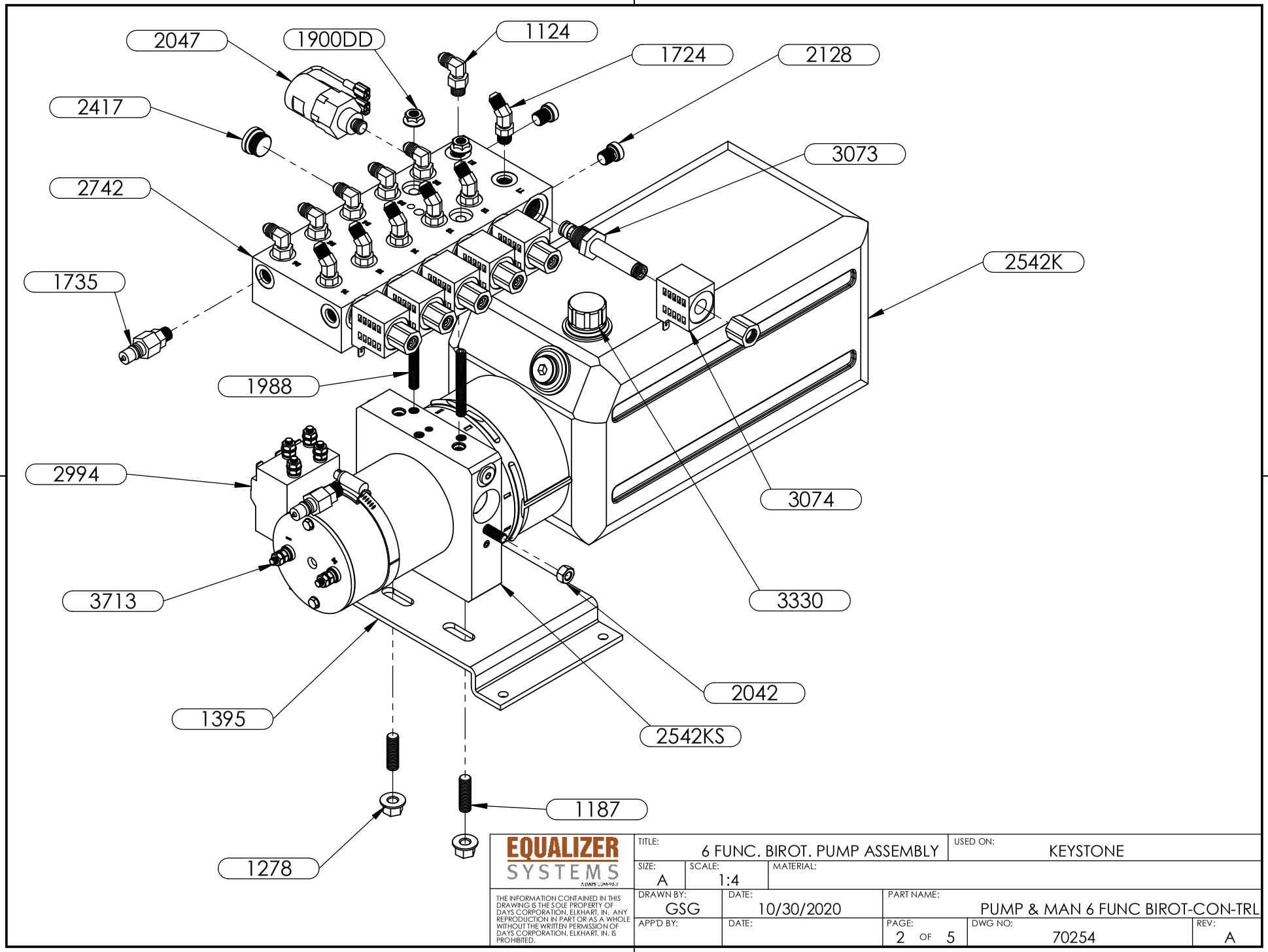

EQUALIZER SYSTEMS
A DAYS COMPANY

THE INFORMATION CONTAINED IN THIS DRAWING IS THE SOLE PROPERTY OF DAYS CORPORATION, ELKHART, IN. ANY REPRODUCTION IN PART OR AS A WHOLE WITHOUT THE WRITTEN PERMISSION OF DAYS CORPORATION, ELKHART, IN. IS PROHIBITED.

TITLE: 6 FUNC. BIROT. PUMP ASSEMBLY			USED ON: KEYSTONE	
SIZE: A	SCALE: 1:4	MATERIAL:		
DRAWN BY: GSG	DATE: 10/30/2020	PART NAME: PUMP & MAN 6 FUNC BIROT-CON-TRL		
APP'D BY:	DATE:	PAGE: 2 OF 5	DWG NO: 70254	REV: A

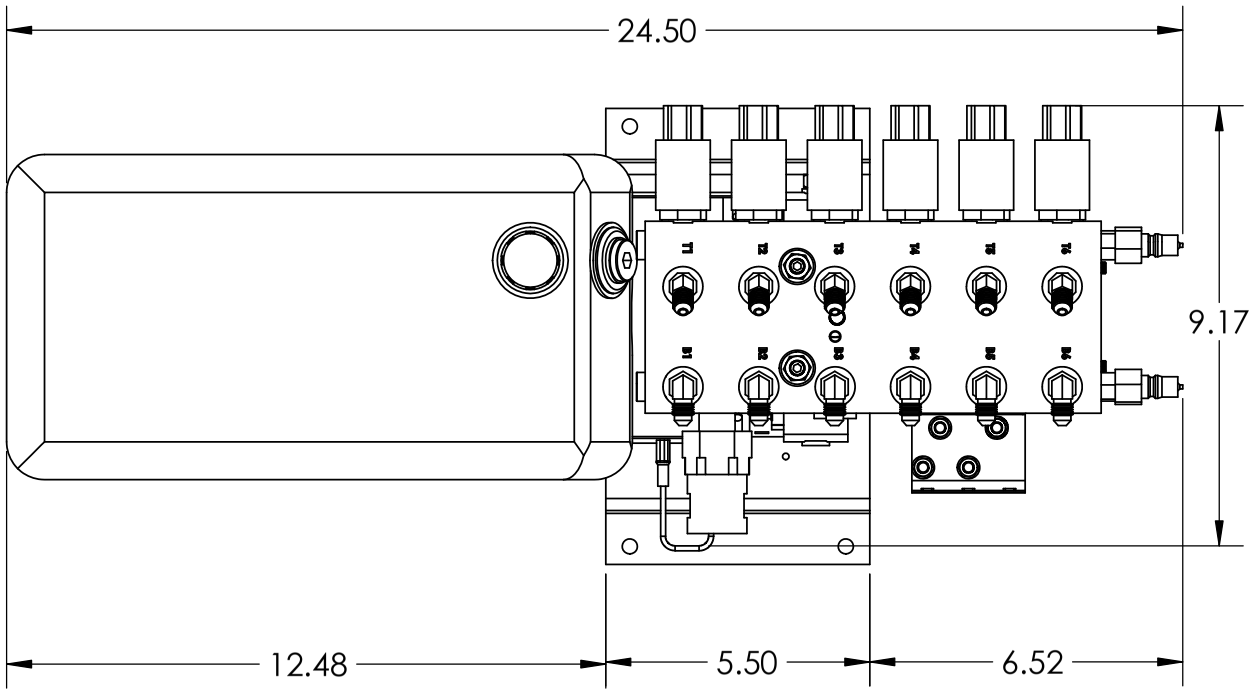

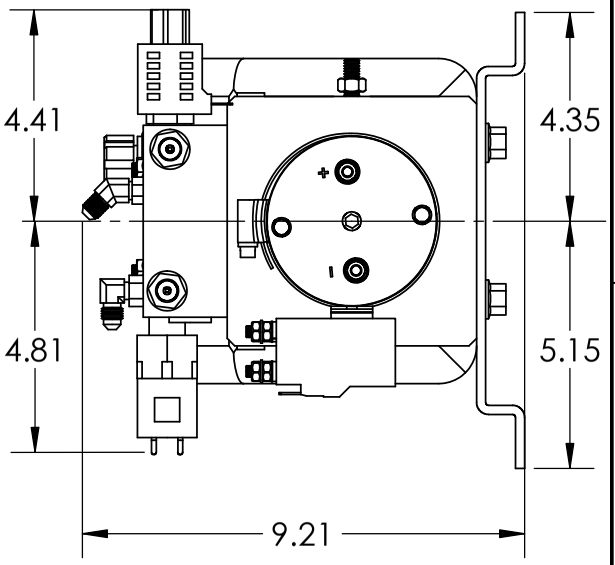

EQUALIZER SYSTEMS
A DAYS COMPANY

THE INFORMATION CONTAINED IN THIS DRAWING IS THE SOLE PROPERTY OF DAYS CORPORATION, ELKHART, IN. ANY REPRODUCTION IN PART OR AS A WHOLE WITHOUT THE WRITTEN PERMISSION OF DAYS CORPORATION, ELKHART, IN. IS PROHIBITED.

TITLE: 6 FUNC. BIROT. PUMP ASSEMBLY			USED ON: KEYSTONE
SIZE: A	SCALE: 1:4	MATERIAL:	
DRAWN BY: GSG	DATE: 10/30/2020	PART NAME: PUMP & MAN 6 FUNC BIROT-CON-TRL	
APP'D BY:	DATE:	PAGE: 3 OF 5	DWG NO: 70254 / REV: A

HYDRAULIC HOSE CONNECTIONS
70254 PUMP

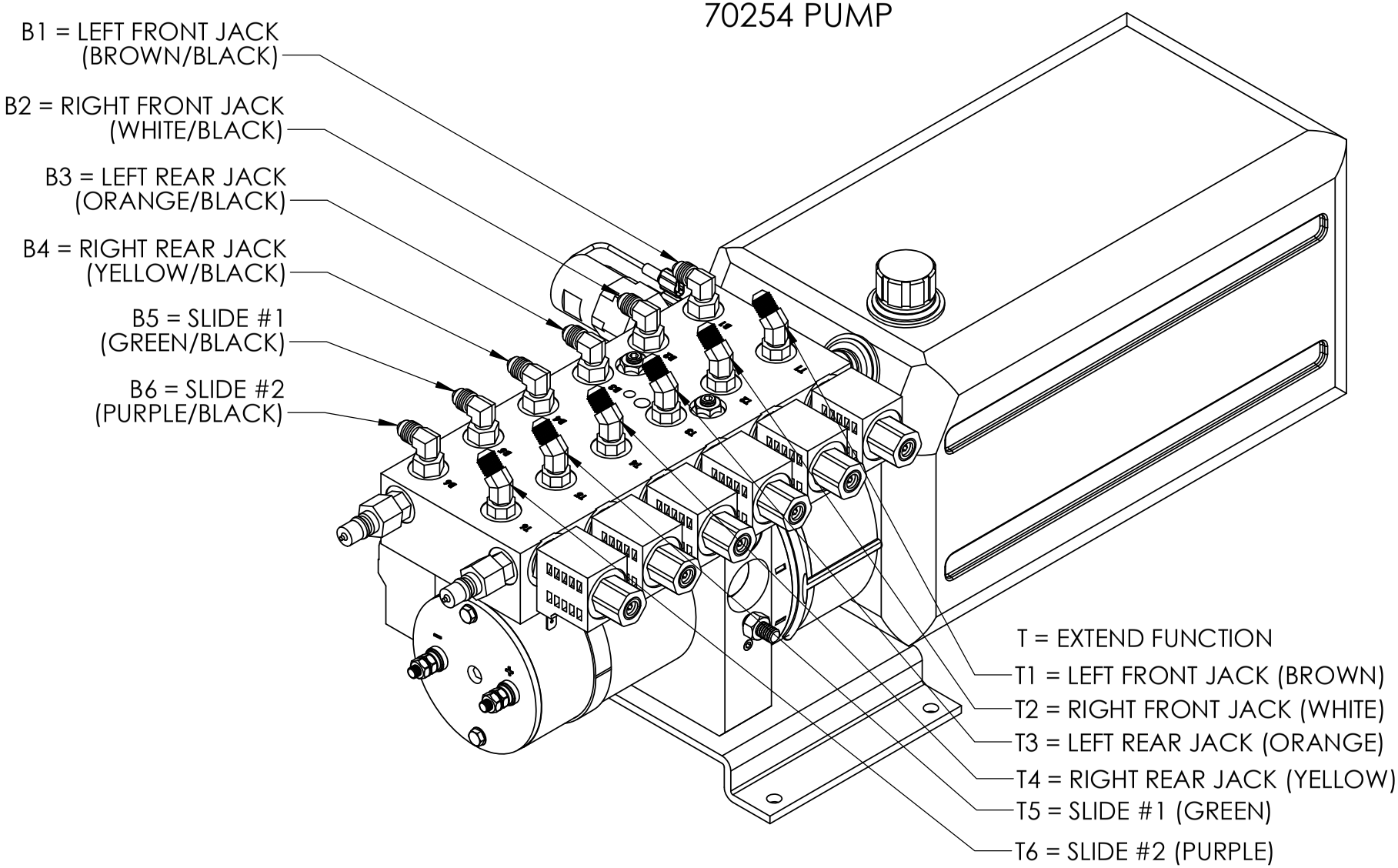

EQUALIZER SYSTEMS A DAYS COMPANY	TITLE: 6 FUNC. BIROT. PUMP ASSEMBLY		USED ON: KEYSTONE	
	SIZE: A	SCALE: 1:3	MATERIAL:	
THE INFORMATION CONTAINED IN THIS DRAWING IS THE SOLE PROPERTY OF DAYS CORPORATION, ELKHART, IN. ANY REPRODUCTION IN PART OR AS A WHOLE WITHOUT THE WRITTEN PERMISSION OF DAYS CORPORATION, ELKHART, IN. IS PROHIBITED.	DRAWN BY: GSG	DATE: 10/30/2020	PART NAME: PUMP & MAN 6 FUNC BIROT-CON-TRL	
	APP'D BY:	DATE:	PAGE: 4 OF 5	DWG NO: 70254 / REV: A

70254
PUMP WIRING

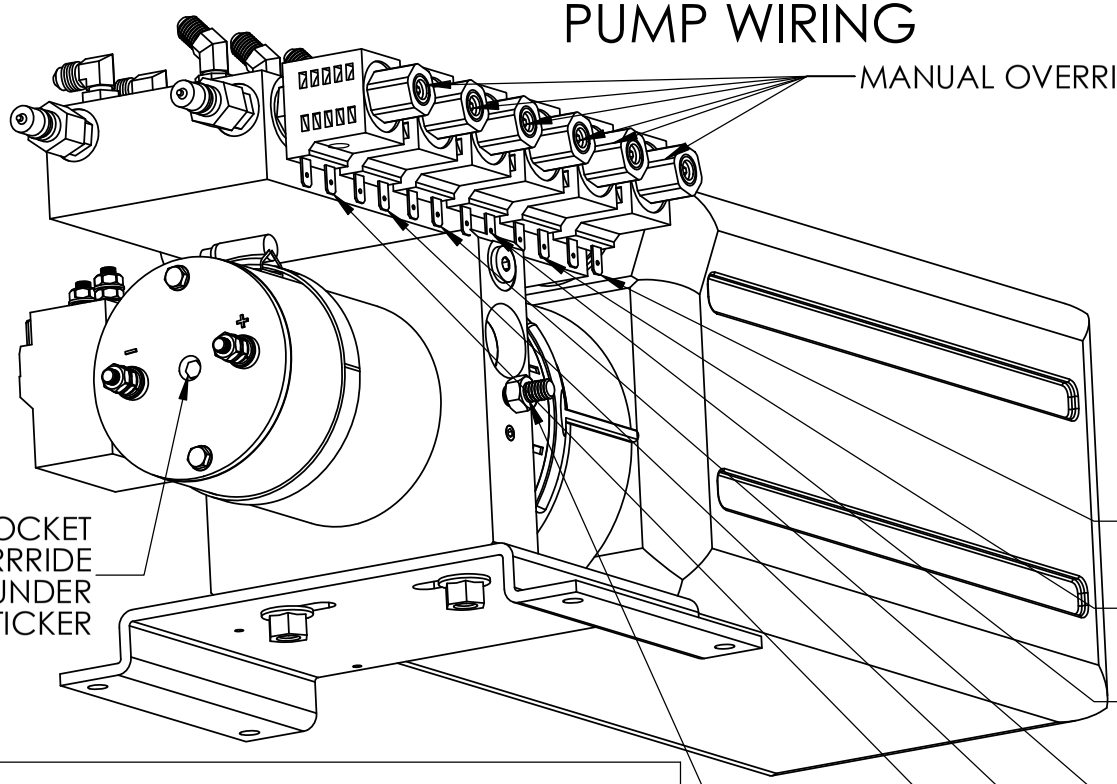

NOTE:
The pump harness has a grey/black, andred/black wire that are not used and should be tied back out of the way.

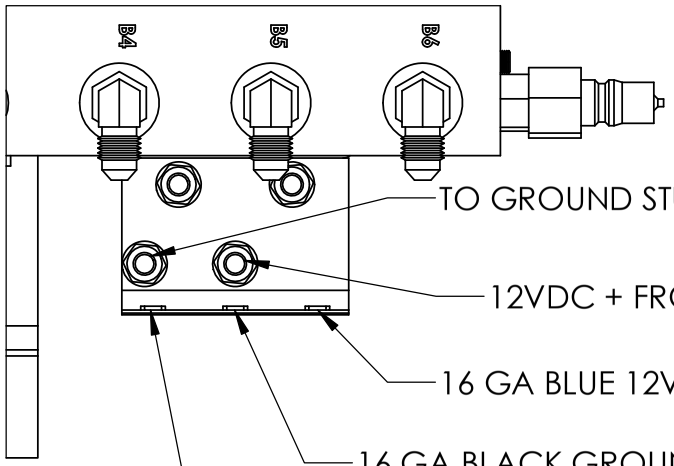

EQUALIZER SYSTEMS A DAYS COMPANY	TITLE: 6 FUNC. BIROT. PUMP ASSEMBLY		USED ON: KEYSTONE	
	SIZE: A	SCALE: 1:3	MATERIAL:	
THE INFORMATION CONTAINED IN THIS DRAWING IS THE SOLE PROPERTY OF DAYS CORPORATION, ELKHART, IN. ANY REPRODUCTION IN PART OR AS A WHOLE WITHOUT THE WRITTEN PERMISSION OF DAYS CORPORATION, ELKHART, IN. IS PROHIBITED.	DRAWN BY: GSG	DATE: 10/30/2020	PART NAME: PUMP & MAN 6 FUNC BIROT-CON-TRL	
	APP'D BY:	DATE:	PAGE: 5 OF 5	DWG NO: 70254	REV: A

PART NUMBER	PART NAME	QTY.
1124	#4 JIC X #4 O-RING MALE 90	5
1187	SCREW-3/8-16 X 1 1/4 CUP PT SSS	2
1278	NUT-3/8 FLANGE	2
1395	PLATE-PUMP MOUNT-CQ	1
1724	FITTING-#4 JIC X #4 O-RING X 45	5
1735	FITTING-DF04-1/4 DIAG. TIP	2
1900DD	NUT-5/16"-18 FLANGE LOCK	2
1988	SCREW-5/16-18 X 2 3/4 SSS CUP POINT	2
2042	NUT-5/16-18 HEX ZINC	1
2047	SWITCH-PRESSURE SWITCH 1200 PSI	1
2128	PLUG-#4 SOCKET HEAD ORING	4
2417	PLUG-#8 SOCKET HEAD O-RING	2
2542K	RESERVOIR-KIT	1
2542KS	PUMP-BIROTATE 8 QT.-KS	1
2742	MANIFOLD- BIROT 6 FUNC COMPACT	1
2994	CONTACTOR-REVERSING	1
3073	VALVE-DELTROL	5
3074	COIL-DELTROL	5
3330	CAP-FILL-3195KS-3200KS-3201KS	1
3713	MOTOR-2542KS	1
6309	HARNESS, PUMP 8 FUNC BR-CONT.-TRL	1
6572C	HARNESS,10" POWER AND GND FEED-CONT.	1
6650BR	HARNESS, 6 FUNC PUMP GROUND LEAD BIROT	1

NOTE:
PARTS 2542K, 2994, 3330, & 3713 ARE INCLUDED IN PART 2542KS AS AN ASSEMBLY.
PARTS 6309, 6572C, & 6650BR ARE NOT SHOWN.

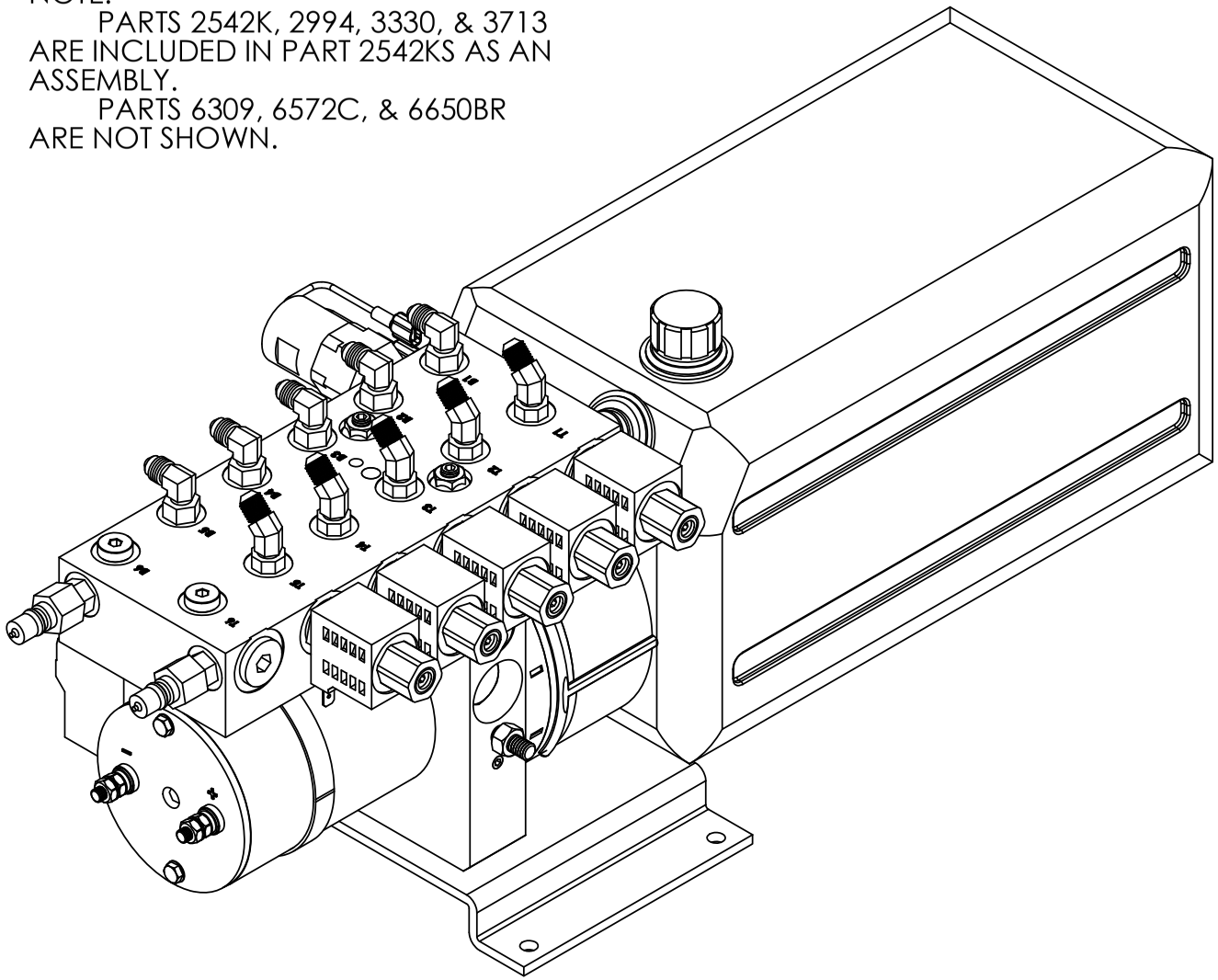

Warranty authorization must come directly from Equalizer Systems. (800) 846-9659.

REV.	REVISIONS	DATE:	BY:
A	1395 ROTATED 180 DEGREES. 1735 CHANGED TO NEW PIECE. 2047 ATTACHES IN NEW LOCATION.	11/2/2020	GSG

EQUALIZER SYSTEMS
A DAYS COMPANY

THE INFORMATION CONTAINED IN THIS DRAWING IS THE SOLE PROPERTY OF DAYS CORPORATION, ELKHART, IN. ANY REPRODUCTION IN PART OR AS A WHOLE WITHOUT THE WRITTEN PERMISSION OF DAYS CORPORATION, ELKHART, IN. IS PROHIBITED.

TITLE: 5 FUNC. BIROT. PUMP ASSEMBLY			USED ON: KEYSTONE
SIZE: A	SCALE: 1:3	MATERIAL:	
DRAWN BY: GSG	DATE: 11/2/2020	PART NAME: PUMP & MAN 5 FUNC BIROT-CON-TRL	
APP'D BY:	DATE:	PAGE: 1 OF 5	DWG NO: 70296 / REV: A

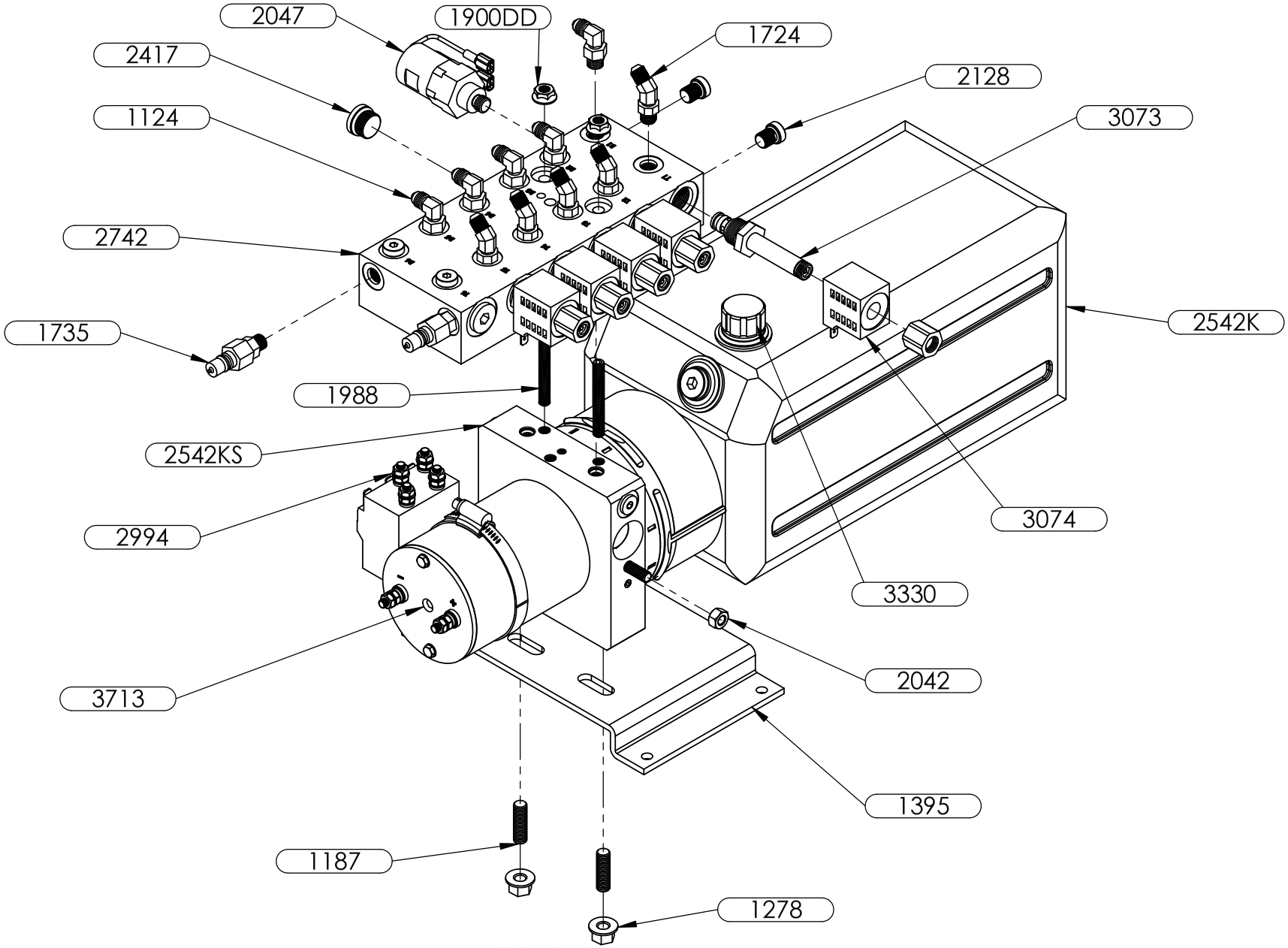

EQUALIZER SYSTEMS
A DAYS COMPANY

THE INFORMATION CONTAINED IN THIS DRAWING IS THE SOLE PROPERTY OF DAYS CORPORATION, ELKHART, IN. ANY REPRODUCTION IN PART OR AS A WHOLE WITHOUT THE WRITTEN PERMISSION OF DAYS CORPORATION, ELKHART, IN. IS PROHIBITED.

TITLE: 5 FUNC. BIROT. PUMP ASSEMBLY			USED ON: KEYSTONE
SIZE: A	SCALE: 1:4	MATERIAL:	
DRAWN BY: GSG	DATE: 11/2/2020	PART NAME: PUMP & MAN 5 FUNC BIROT-CON-TRL	
APP'D BY:	DATE:	PAGE: 2 OF 5	DWG NO: 70296 / REV: A

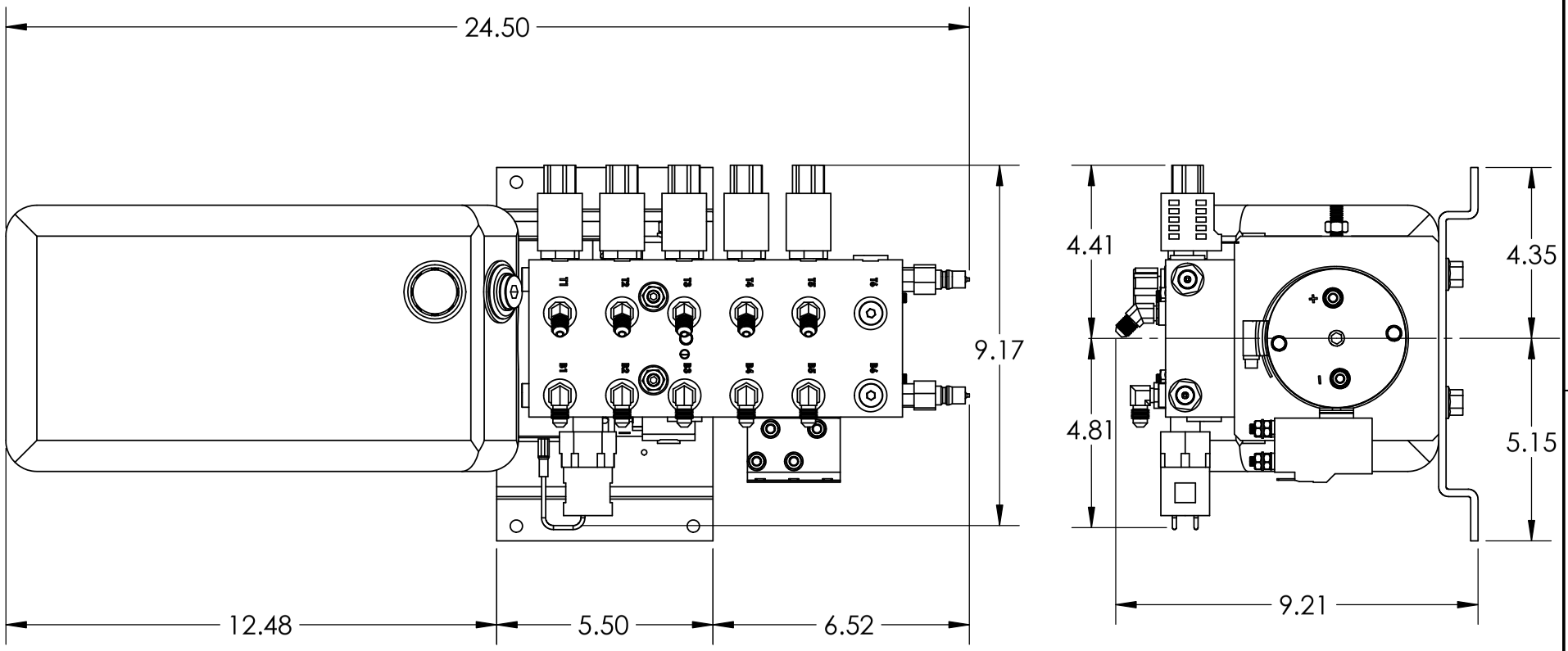

EQUALIZER SYSTEMS A DAYS COMPANY	TITLE: 5 FUNC. BIROT. PUMP ASSEMBLY		USED ON: KEYSTONE	
	SIZE: A	SCALE: 1:4	MATERIAL:	
THE INFORMATION CONTAINED IN THIS DRAWING IS THE SOLE PROPERTY OF DAYS CORPORATION, ELKHART, IN. ANY REPRODUCTION IN PART OR AS A WHOLE WITHOUT THE WRITTEN PERMISSION OF DAYS CORPORATION, ELKHART, IN. IS PROHIBITED.	DRAWN BY: GSG	DATE: 11/2/2020	PART NAME: PUMP & MAN 5 FUNC BIROT-CON-TRL	
	APP'D BY:	DATE:	PAGE: 3 OF 5	DWG NO: 70296 / REV: A

HYDRAULIC HOSE CONNECTIONS
70296 PUMP

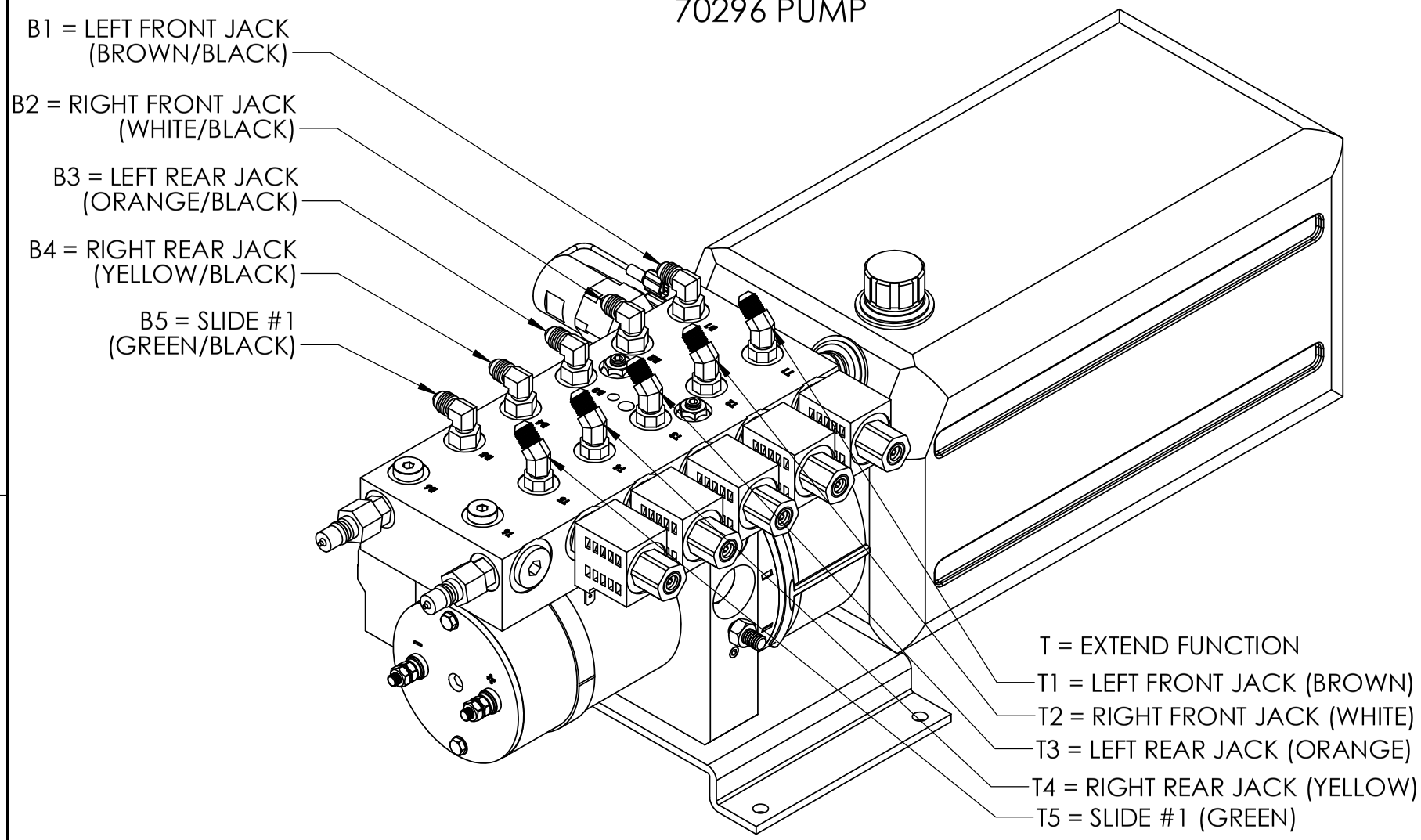

EQUALIZER SYSTEMS
A DAYS COMPANY

THE INFORMATION CONTAINED IN THIS DRAWING IS THE SOLE PROPERTY OF DAYS CORPORATION, ELKHART, IN. ANY REPRODUCTION IN PART OR AS A WHOLE WITHOUT THE WRITTEN PERMISSION OF DAYS CORPORATION, ELKHART, IN. IS PROHIBITED.

TITLE: 5 FUNC. BIROT. PUMP ASSEMBLY			USED ON: KEYSTONE
SIZE: A	SCALE: 1:3	MATERIAL:	
DRAWN BY: GSG	DATE: 11/2/2020	PART NAME: PUMP & MAN 5 FUNC BIROT-CON-TRL	
APP'D BY:	DATE:	PAGE: 4 OF 5	DWG NO: 70296 / REV: A

70296
PUMP WIRING

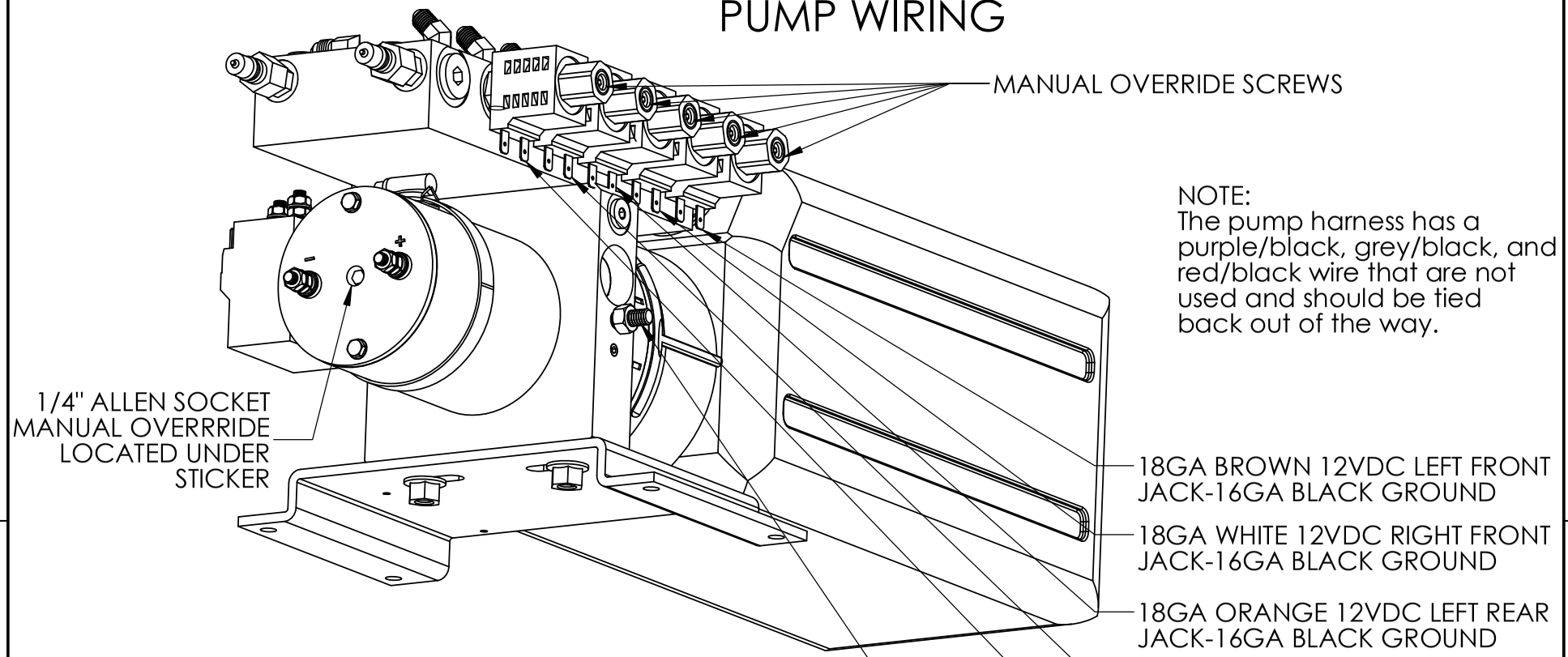

NOTE:
The pump harness has a purple/black, grey/black, and red/black wire that are not used and should be tied back out of the way.

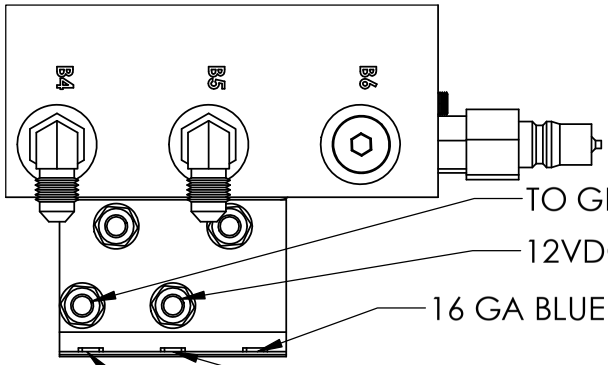

EQUALIZER SYSTEMS
A DAYS COMPANY

THE INFORMATION CONTAINED IN THIS DRAWING IS THE SOLE PROPERTY OF DAYS CORPORATION, ELKHART, IN. ANY REPRODUCTION IN PART OR AS A WHOLE WITHOUT THE WRITTEN PERMISSION OF DAYS CORPORATION, ELKHART, IN. IS PROHIBITED.

TITLE: 5 FUNC. BIROT. PUMP ASSEMBLY			USED ON: KEYSTONE
SIZE: A	SCALE: 1:3	MATERIAL:	
DRAWN BY: GSG	DATE: 11/2/2020	PART NAME: PUMP & MAN 5 FUNC BIROT-CON-TRL	
APP'D BY:	DATE:	PAGE: 5 OF 5	DWG NO: 70296 — REV: A

DRAWING NUMBER	PART NAME	QTY.
1124	#4 JIC X #4 O-RING MALE 90	1
1190	FITTING- #4 X #4 JIC SWIVEL 90	1
1758	FITTING-RESTRICTOR #4 X #4 -042" ORIFICE	1
1862	NUT-5/8-18 GR 2 FHN	2
1866F	WASHER-5/8-18 HEX JAM NYLON INSERT	2
2154	BOLT-5/8-18 X 1 HHCS	1
2157	WASHER-5/8 INTERNAL TOOTH	1
2305	NUT-5/8-18 HEX JAM NYLON INSERT	1
2453AEQ	CYLINDER-SLIDE 1 3-8" BORE X 24"	1

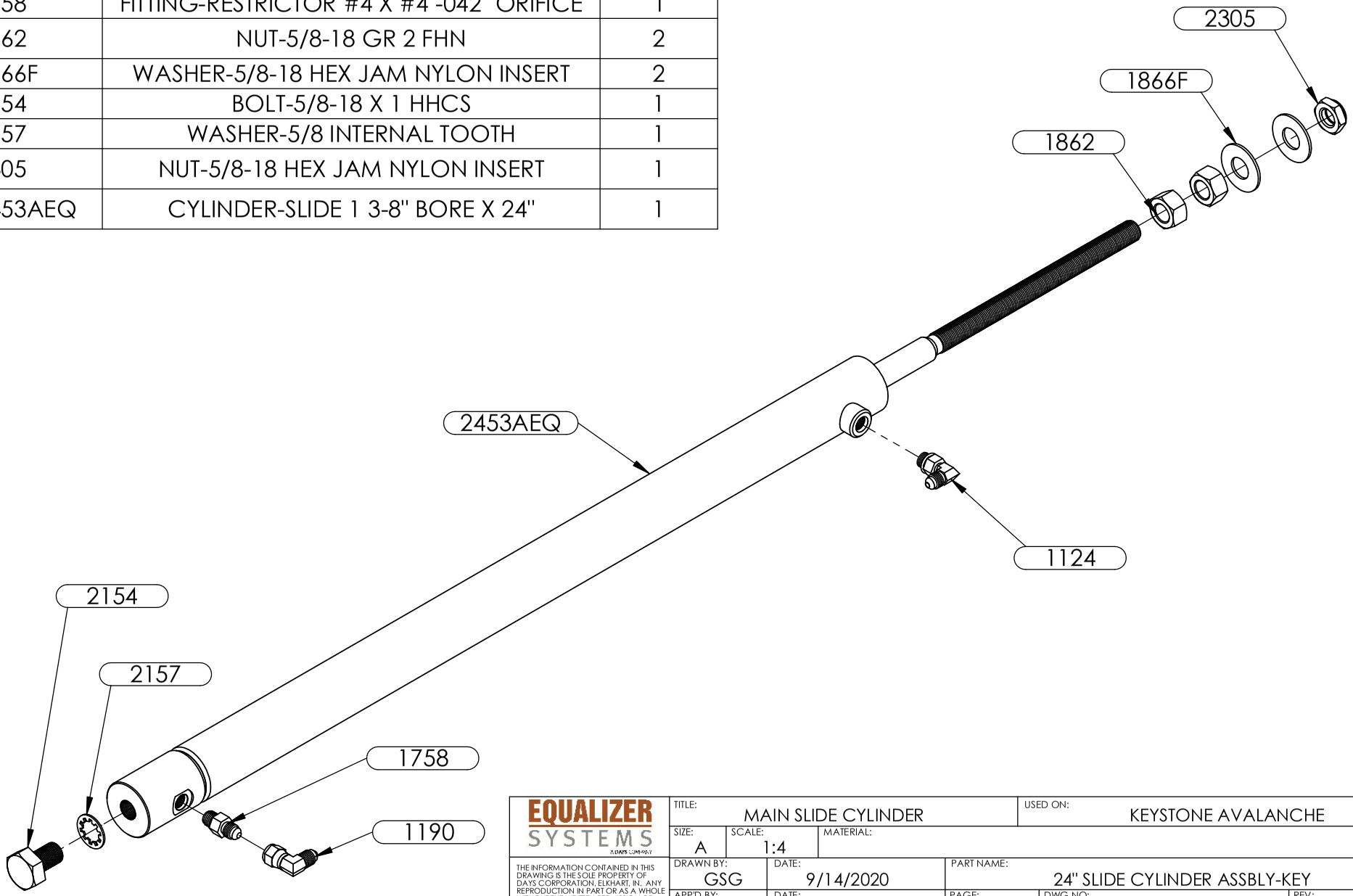

EQUALIZER SYSTEMS
A DAYS COMPANY

THE INFORMATION CONTAINED IN THIS DRAWING IS THE SOLE PROPERTY OF DAYS CORPORATION, ELKHART, IN. ANY REPRODUCTION IN PART OR AS A WHOLE WITHOUT THE WRITTEN PERMISSION OF DAYS CORPORATION, ELKHART, IN. IS PROHIBITED.

TITLE: MAIN SLIDE CYLINDER			USED ON: KEYSTONE AVALANCHE
SIZE: A	SCALE: 1:4	MATERIAL:	
DRAWN BY: GSG	DATE: 9/14/2020	PART NAME: 24" SLIDE CYLINDER ASSBLY-KEY	
APP'D BY:	DATE:	PAGE: 1 OF 2	DWG NO: 70249 — REV: B

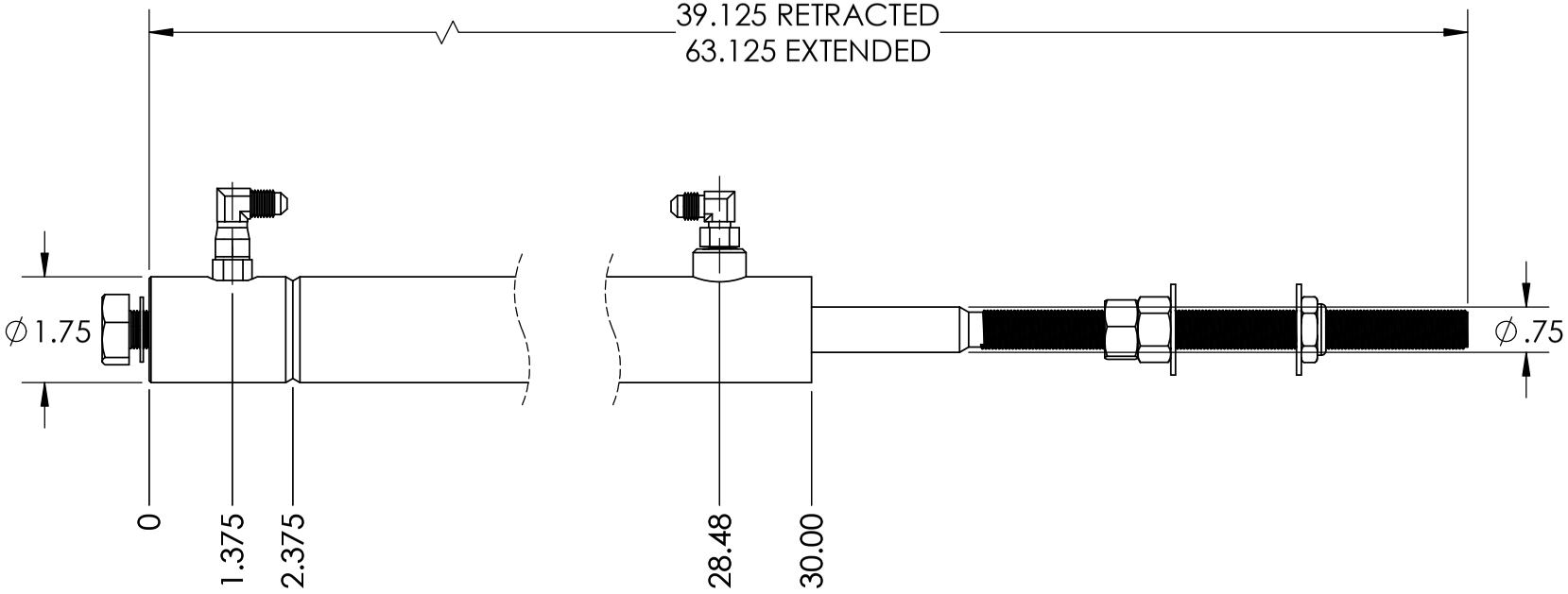

EQUALIZER SYSTEMS
A DAYS COMPANY

THE INFORMATION CONTAINED IN THIS DRAWING IS THE SOLE PROPERTY OF DAYS CORPORATION, ELKHART, IN. ANY REPRODUCTION IN PART OR AS A WHOLE WITHOUT THE WRITTEN PERMISSION OF DAYS CORPORATION, ELKHART, IN. IS PROHIBITED.

TITLE: MAIN SLIDE CYLINDER			USED ON: KEYSTONE AVALANCHE
SIZE: A	SCALE: 1:3	MATERIAL:	
DRAWN BY: GSG	DATE: 9/14/2020	PART NAME: 24" SLIDE CYLINDER ASSBLY-KEY	
APP'D BY:	DATE:	PAGE: 2 OF 2	DWG NO: 70249 / REV: B

DRAWING NUMBER	PART NAME	QTY.
1124	#4 JIC X #4 O-RING MALE 90	1
1190	FITTING- #4 X #4 JIC SWIVEL 90	1
1758	FITTING-RESTRICTOR #4 X #4 -042" ORIFICE	1
1862	NUT-5/8-18 GR 2 FHN	2
1866F	WASHER-5/8-18 HEX JAM NYLON INSERT	2
2154	BOLT-5/8-18 X 1 HHCS	1
2157	WASHER-5/8 INTERNAL TOOTH	1
2218EQ	38" SLIDE CYLINDER ASSBLY-KEY	1
2305	NUT-5/8-18 HEX JAM NYLON INSERT	1

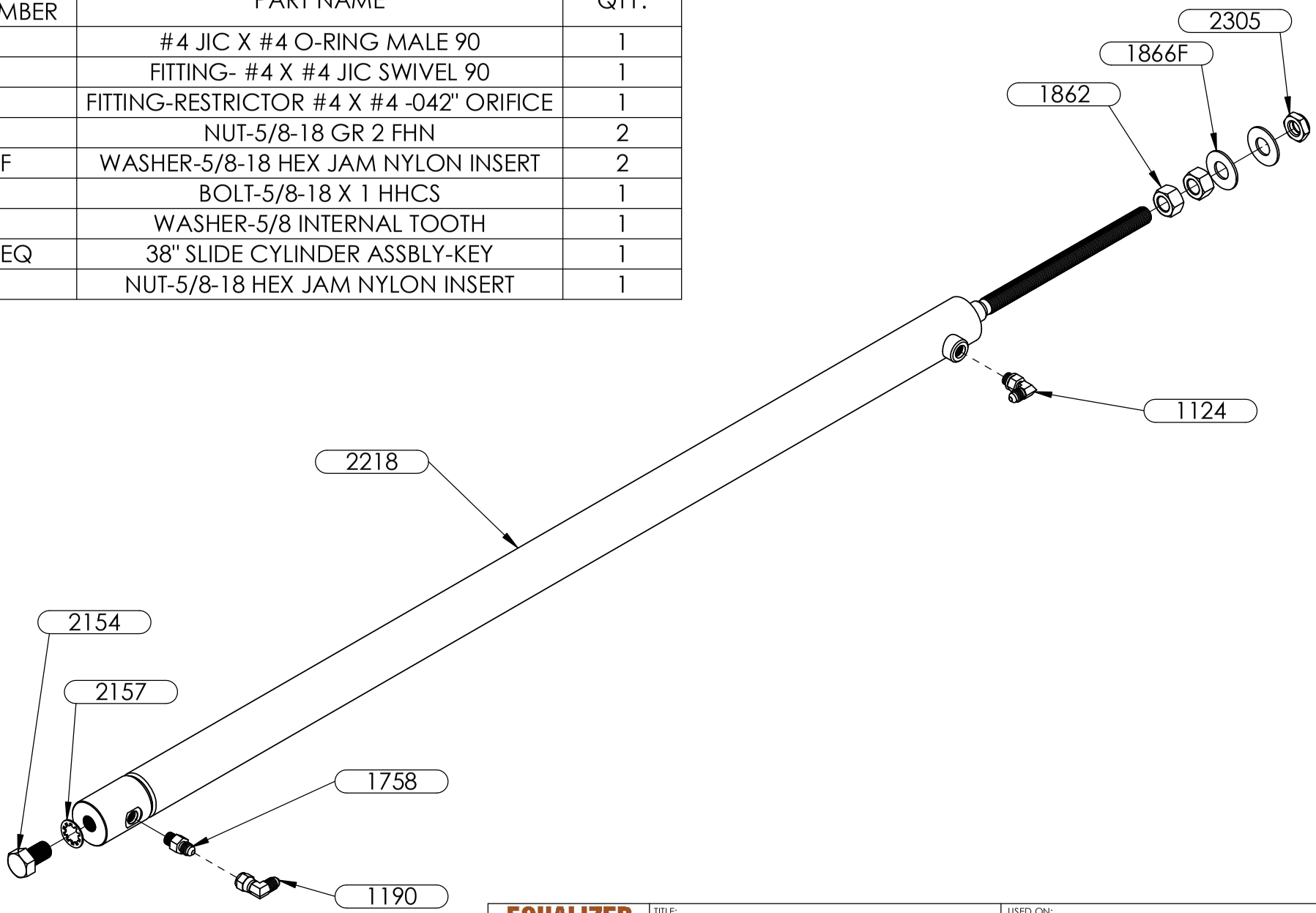

EQUALIZER SYSTEMS
A DAYS COMPANY

THE INFORMATION CONTAINED IN THIS DRAWING IS THE SOLE PROPERTY OF DAYS CORPORATION, ELKHART, IN. ANY REPRODUCTION IN PART OR AS A WHOLE WITHOUT THE WRITTEN PERMISSION OF DAYS CORPORATION, ELKHART, IN. IS PROHIBITED.

TITLE: MAIN SLIDE CYLINDER			USED ON: KEYSTONE AVALANCHE
SIZE: A	SCALE: 1:5	MATERIAL:	
DRAWN BY: GSG	DATE: 9/14/2020	PART NAME: 38" SLIDE CYLINDER ASSBLY-KEY	
APP'D BY:	DATE:	PAGE: 1 OF 2	DWG NO: 70250 / REV: A

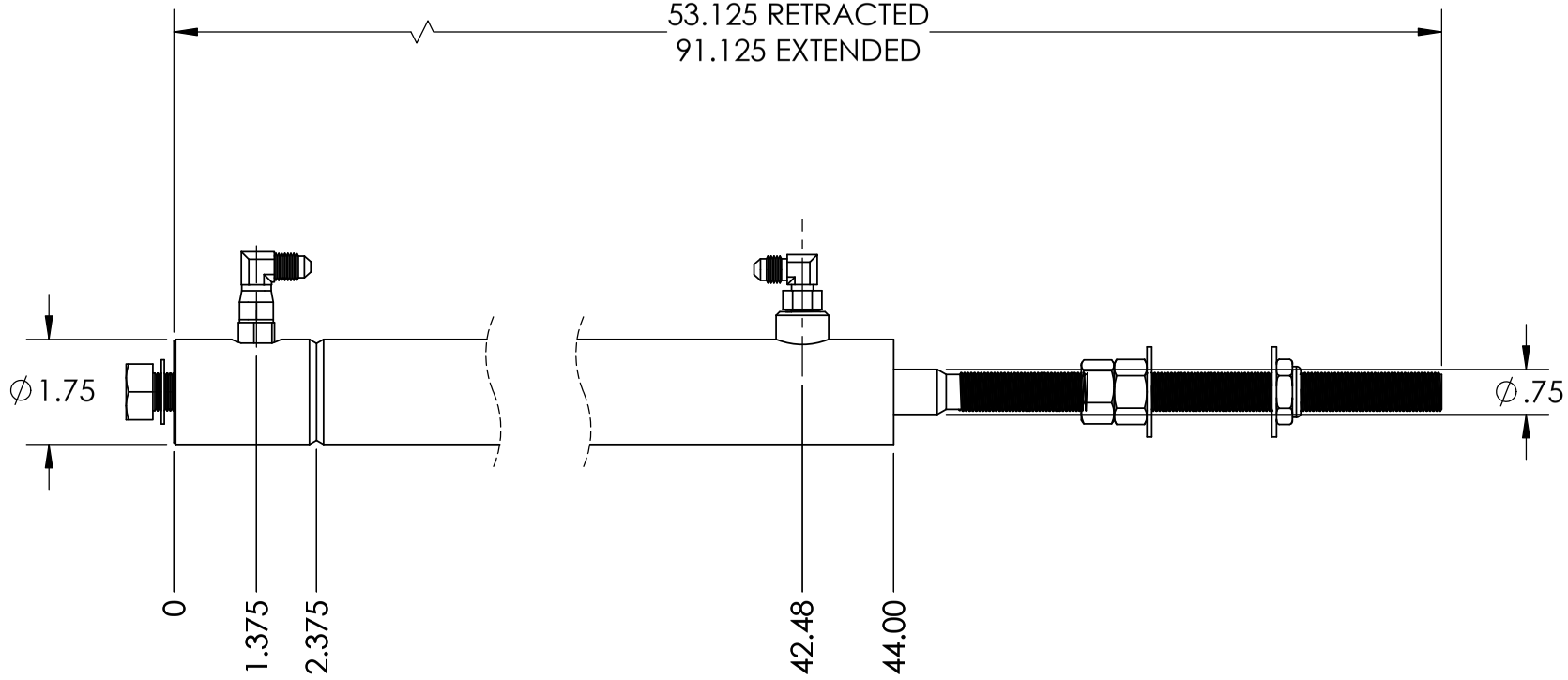

EQUALIZER SYSTEMS A DAYS COMPANY	TITLE: MAIN SLIDE CYLINDER		USED ON: KEYSTONE AVALANCHE	
	SIZE: A	SCALE: 1:3	MATERIAL:	
THE INFORMATION CONTAINED IN THIS DRAWING IS THE SOLE PROPERTY OF DAYS CORPORATION, ELKHART, IN. ANY REPRODUCTION IN PART OR AS A WHOLE WITHOUT THE WRITTEN PERMISSION OF DAYS CORPORATION, ELKHART, IN. IS PROHIBITED.	DRAWN BY: GSG	DATE: 9/14/2020	PART NAME: 38" SLIDE CYLINDER ASSBLY-KEY	
	APP'D BY:	DATE:	PAGE: 2 OF 2	DWG NO: 70250 / REV: A

70251 PARTS LIST

ITEM	PART#	DESCRIPTION	QUAN	COLOR CODE	LOCATION
1	2459	HOSE–4'	1	WHITE SOLID	PUMP PORT T2 TO TOP OF RF JACK
2	2461	HOSE–6'	1	WHITE STRIPE	PUMP PORT B2 TO BOTTOM OF RF JACK
3	2465	HOSE–10'	1	BROWN SOLID	PUMP PORT T1 TO TOP OF LF JACK
4	2465	HOSE–10'	1	YELLOW SOLID (2 STICKERS)	TOP OF RM JACK TO TEE
5	2465	HOSE–10'	1	YELLOW SOLID (2 STICKERS)	TOP OF RR JACK TO TEE
6	2465	HOSE–10'	1	YELLOW STRIPE (2 STICKERS)	BOTTOM OF RM JACK TO TEE
7	2465	HOSE–10'	1	YELLOW STRIPE (2 STICKERS)	BOTTOM OF RR JACK TO TEE
8	2465	HOSE–10'	1	ORANGE SOLID (2 STICKERS)	TOP OF LM JACK TO TEE
9	2465	HOSE–10'	1	ORANGE SOLID (2 STICKERS)	TOP OF LR JACK TO TEE
10	2465	HOSE–10'	1	ORANGE STRIPE (2 STICKERS)	BOTTOM OF LM JACK TO TEE
11	2465	HOSE–10'	1	ORANGE STRIPE (2 STICKERS)	BOTTOM OF LR JACK TO TEE
12	2467	HOSE–12'	1	BROWN STRIPE	PUMP PORT B1 TO BOTTOM OF LF JACK
13	2475	HOSE–20'	1	GREY STRIPE	PUMP PORT B7 TO ROD END OF SLIDE CYL #3
14	2478	HOSE–24'	1	GREY SOLID	PUMP PORT T7 TO CLOSED END OF SLIDE CYL #3
15	3018	HOSE–26'	1	YELLOW STRIPE	PUMP PORT B4 TO TEE
16	3018	HOSE–26'	1	YELLOW SOLID	PUMP PORT T4 TO TEE
17	2527	HOSE–30'	1	GREEN SOLID	PUMP PORT T5 TO CLOSED END OF SLIDE CYL #1
18	2482	HOSE–32'	1	GREEN STRIPE	PUMP PORT B5 TO ROD END OF SLIDE CYL #1
19	2482	HOSE–32'	1	ORANGE SOLID	PUMP PORT T3 TO TEE
20	2482	HOSE–32'	1	ORANGE STRIPE	PUMP PORT B3 TO TEE
21	2486	HOSE–36'	1	PURPLE SOLID	PUMP PORT T6 TO CLOSED END OF SLIDE CYL #2
22	2488	HOSE–38'	1	PURPLE STRIPE	PUMP PORT B6 TO ROD END OF SLIDE CYL #2
		7871ALAV FITTING KIT–SIX POINT			
23	1124	FITTING–#4 JIC X #4 OR MALE 90	6	–	BOTTOM OF EACH JACK
24	1190	FITTING–#4 X #4 JIC SWIVEL 90	2	–	90 DEGREE ADAPTER FOR TOP OF JACKS
25	1262	FITTING–UNION TEE	4	–	BETWEEN REAR JACKS
26	1403	FITTING–RESTRICTOR #6 X #4–042"	6	–	TOP OF ALL JACKS

Equalizer 55169 COUNTY ROAD 3
ELKHART, IN 46515

NOTICE – This drawing, including principles of design, is the property of Days Corporation, Elkhart, Indiana, with the agreement that it is not to be reproduced, copied, or loaned in any manner that may constitute a detriment directly or indirectly to Days Corporation. Acceptance of this will be construed as an agreement of the above.

#	REVISIONS	BY:	DATE:
A	Changed fitting kit.	SJ	1/18/21

UNLESS OTHERWISE SPECIFIED:
TOLERANCES:
.XXX ± 0.010
.XX ± 0.010
.X ± 0.030
ANG. ± 1/2°
REMOVE ALL BURRS AND SHARP EDGES .015 MAX

TITLE: 6 POINT LEVELING HOSE CHART			USED ON: KEYSTONE AVALANCHE
SIZE: A	SCALE: 1: 1	MATERIAL: AS NOTED	
DRW BY: SJ	DATE: 10/2/19	PART NAME: HOSE KIT–8835 AVALANCHE	
APP'D BY: –	DATE: –	PAGE: 1 OF 3	DWG NO.: 70251	REV: A

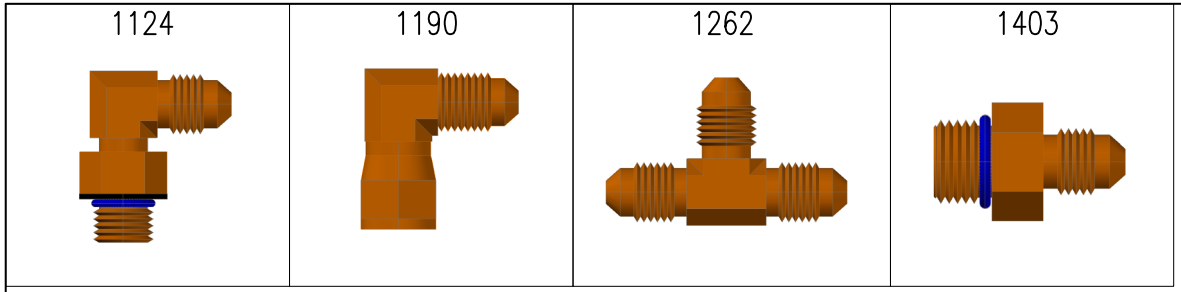

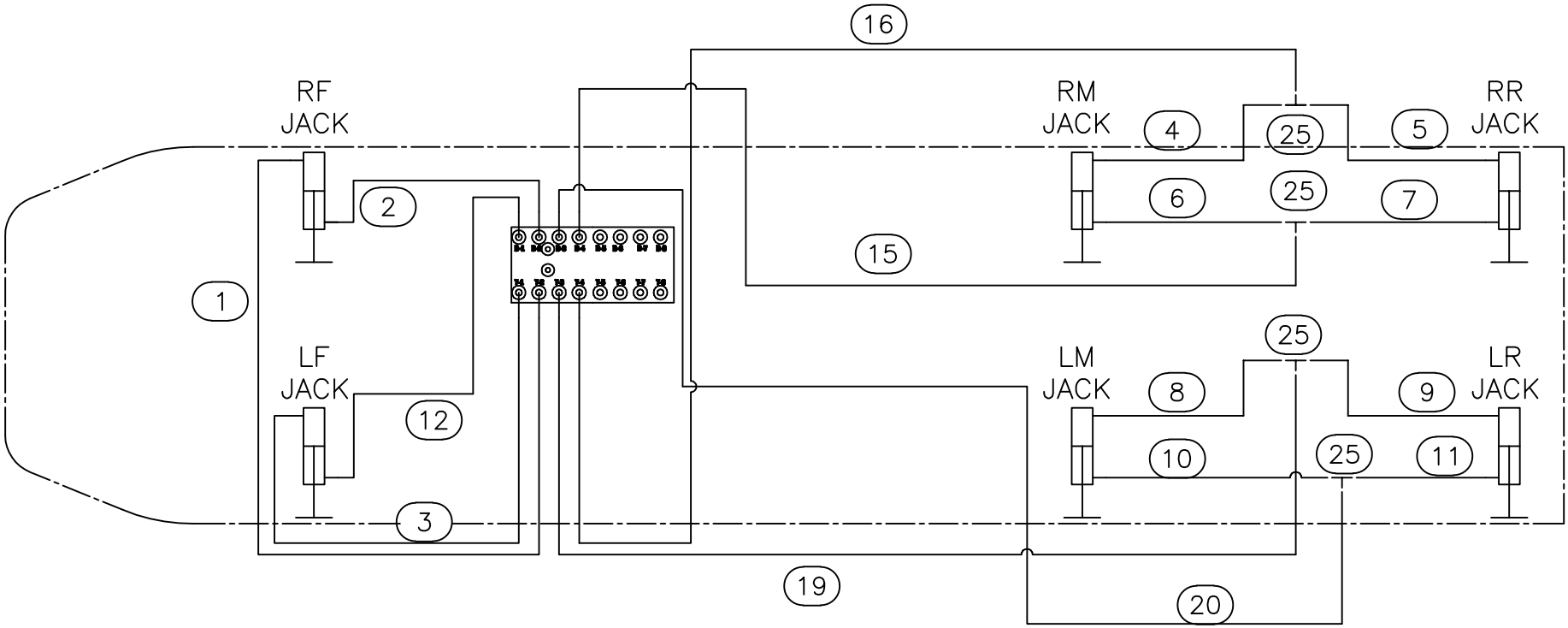

JACK PLUMBING

Warranty authorization must come directly from Equalizer Systems. (800) 846-9659.

Equalizer 55169 COUNTY ROAD 3 ELKHART, IN 46515

NOTICE – This drawing, including principles of design, is the property of Days Corporation, Elkhart, Indiana, with the agreement that it is not to be reproduced, copied, or loaned in any manner that may constitute a detriment directly or indirectly to Days Corporation. Acceptance of this will be construed as an agreement of the above.

#	REVISIONS	BY:	DATE:
A	Changed fitting kit.	SJ	1/18/21

UNLESS OTHERWISE SPECIFIED:
TOLERANCES:
.XXX ± 0.010
.XX ± 0.010
.X ± 0.030
ANG. ± 1/2°
REMOVE ALL BURRS AND SHARP EDGES .015 MAX

TITLE: 6 POINT LEVELING HOSE CHART			USED ON: KEYSTONE AVALANCHE
SIZE: A	SCALE: 1: 1	MATERIAL: AS NOTED	
DRW BY: SJ	DATE: 10/2/19	PART NAME: HOSE KIT–8835 AVALANCHE	
APP'D BY: –	DATE: –	PAGE: 2 OF 3	DWG NO.: 70251	REV: A

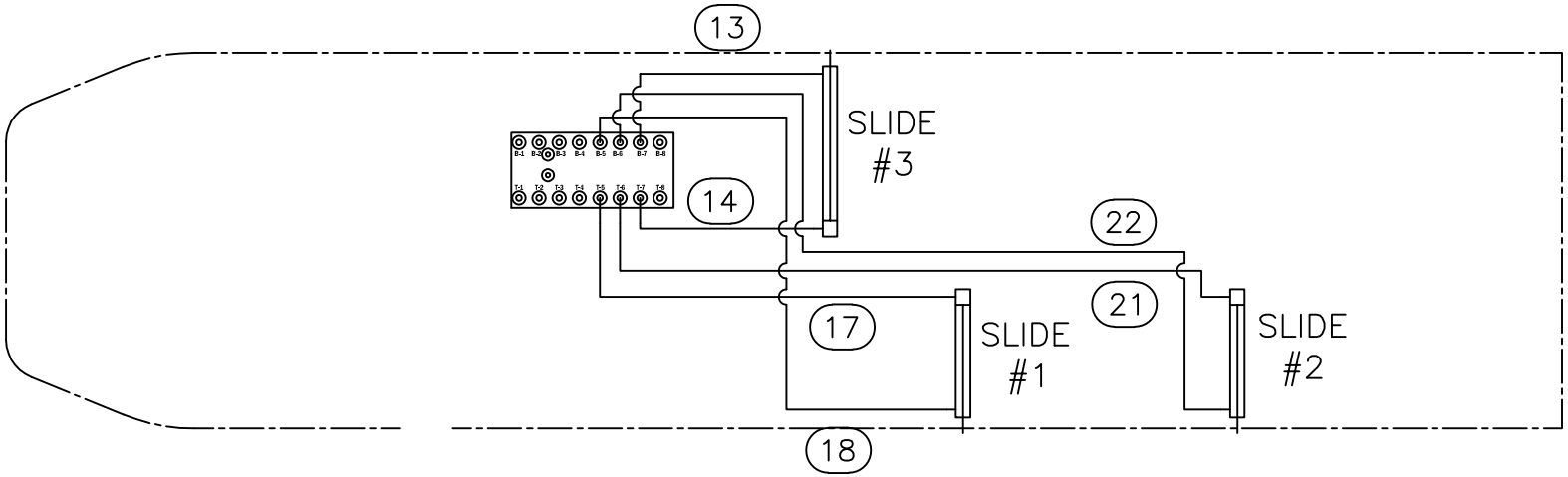

SLIDE CYLINDER PLUMBING

Warranty authorization must come directly from Equalizer Systems. (800) 846-9659.

Equalizer
55169 COUNTY ROAD 3
ELKHART, IN 46515

NOTICE – This drawing, including principles of design, is the property of Days Corporation, Elkhart, Indiana, with the agreement that it is not to be reproduced, copied, or loaned in any manner that may constitute a detriment directly or indirectly to Days Corporation. Acceptance of this will be construed as an agreement of the above.

#	REVISIONS	BY:	DATE:
A	Changed fitting kit.	SJ	1/18/21

UNLESS OTHERWISE SPECIFIED:
TOLERANCES:
.XXX ± 0.010
.XX ± 0.010
.X ± 0.030
ANG. ± 1/2°
REMOVE ALL BURRS AND SHARP EDGES .015 MAX

TITLE: 6 POINT LEVELING HOSE CHART			USED ON: KEYSTONE AVALANCHE
SIZE: A	SCALE: 1: 1	MATERIAL: AS NOTED	
DRW BY: SJ	DATE: 10/2/19	PART NAME: HOSE KIT–8835 AVALANCHE	
APP'D BY: –	DATE: –	PAGE: 3 OF 3	DWG NO.: 70251	REV: A

70255 PARTS LIST

ITEM	PART#	DESCRIPTION	QUAN	COLOR CODE	LOCATION
1	2459	HOSE–4'	1	WHITE SOLID	PUMP PORT T2 TO TOP OF RF JACK
2	2461	HOSE–6'	1	WHITE STRIPE	PUMP PORT B2 TO BOTTOM OF RF JACK
3	2465	HOSE–10'	1	BROWN SOLID	PUMP PORT T1 TO TOP OF LF JACK
4	2465	HOSE–10'	1	YELLOW SOLID (2 STICKERS)	TOP OF RM JACK TO TEE
5	2465	HOSE–10'	1	YELLOW SOLID (2 STICKERS)	TOP OF RR JACK TO TEE
6	2465	HOSE–10'	1	YELLOW STRIPE (2 STICKERS)	BOTTOM OF RM JACK TO TEE
7	2465	HOSE–10'	1	YELLOW STRIPE (2 STICKERS)	BOTTOM OF RR JACK TO TEE
8	2465	HOSE–10'	1	ORANGE SOLID (2 STICKERS)	TOP OF LM JACK TO TEE
9	2465	HOSE–10'	1	ORANGE SOLID (2 STICKERS)	TOP OF LR JACK TO TEE
10	2465	HOSE–10'	1	ORANGE STRIPE (2 STICKERS)	BOTTOM OF LM JACK TO TEE
11	2465	HOSE–10'	1	ORANGE STRIPE (2 STICKERS)	BOTTOM OF LR JACK TO TEE
12	2467	HOSE–12'	1	BROWN STRIPE	PUMP PORT B1 TO BOTTOM OF LF JACK
13	2475	HOSE–20'	1	PURPLE STRIPE	PUMP PORT B6 TO ROD END OF SLIDE CYL #2
14	2478	HOSE–24'	1	PURPLE SOLID	PUMP PORT T6 TO CLOSED END OF SLIDE CYL #2
15	2478	HOSE–24'	1	GREEN SOLID	PUMP PORT T5 TO CLOSED END OF SLIDE CYL #1
16	3018	HOSE–26'	1	GREEN STRIPE	PUMP PORT B5 TO ROD END OF SLIDE CYL #1
17	3018	HOSE–26'	1	YELLOW SOLID	PUMP PORT T4 TO TEE
18	3018	HOSE–26'	1	YELLOW STRIPE	PUMP PORT B4 TO TEE
19	2482	HOSE–32'	1	ORANGE SOLID	PUMP PORT T3 TO TEE
20	2482	HOSE–32'	1	ORANGE STRIPE	PUMP PORT B3 TO TEE
		7871ALAV FITTING KIT–SIX POINT			
21	1124	FITTING–#4 JIC X #4 OR MALE 90	6	–	BOTTOM OF EACH JACK
22	1190	FITTING–#4 X #4 JIC SWIVEL 90	2	–	90 DEGREE ADAPTER FOR TOP OF JACKS
23	1262	FITTING–UNION TEE	4	–	BETWEEN REAR JACKS
24	1403	FITTING–RESTRICTOR #6 X #4–042"	6	–	TOP OF ALL JACKS

Equalizer 55169 COUNTY ROAD 3
ELKHART, IN 46515

NOTICE – This drawing, including principles of design, is the property of Days Corporation, Elkhart, Indiana, with the agreement that it is not to be reproduced, copied, or loaned in any manner that may constitute a detriment directly or indirectly to Days Corporation. Acceptance of this will be construed as an agreement of the above.

#	REVISIONS	BY:	DATE:
A	Changed fitting kit	SJ	1/15/21

UNLESS OTHERWISE SPECIFIED:
TOLERANCES:
.XXX ± 0.010
.XX ± 0.010
.X ± 0.030
ANG. ± 1/2°
REMOVE ALL BURRS AND SHARP EDGES .015 MAX

TITLE: 6 POINT LEVELING HOSE CHART			USED ON: KEYSTONE ALPINE 3850RD
SIZE: A	SCALE: 1: 1	MATERIAL: AS NOTED	
DRW BY: SJ	DATE: 10/11/19	PART NAME: HOSE KIT–8836 ALPINE	
APP'D BY: –	DATE: –	PAGE: 1 OF 3	DWG NO.: 70255 REV: A

1124	1190	1262	1403
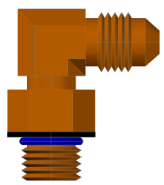	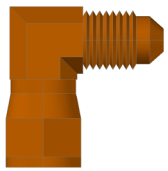	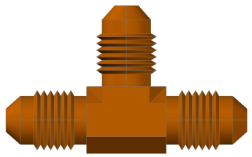	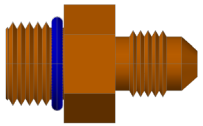

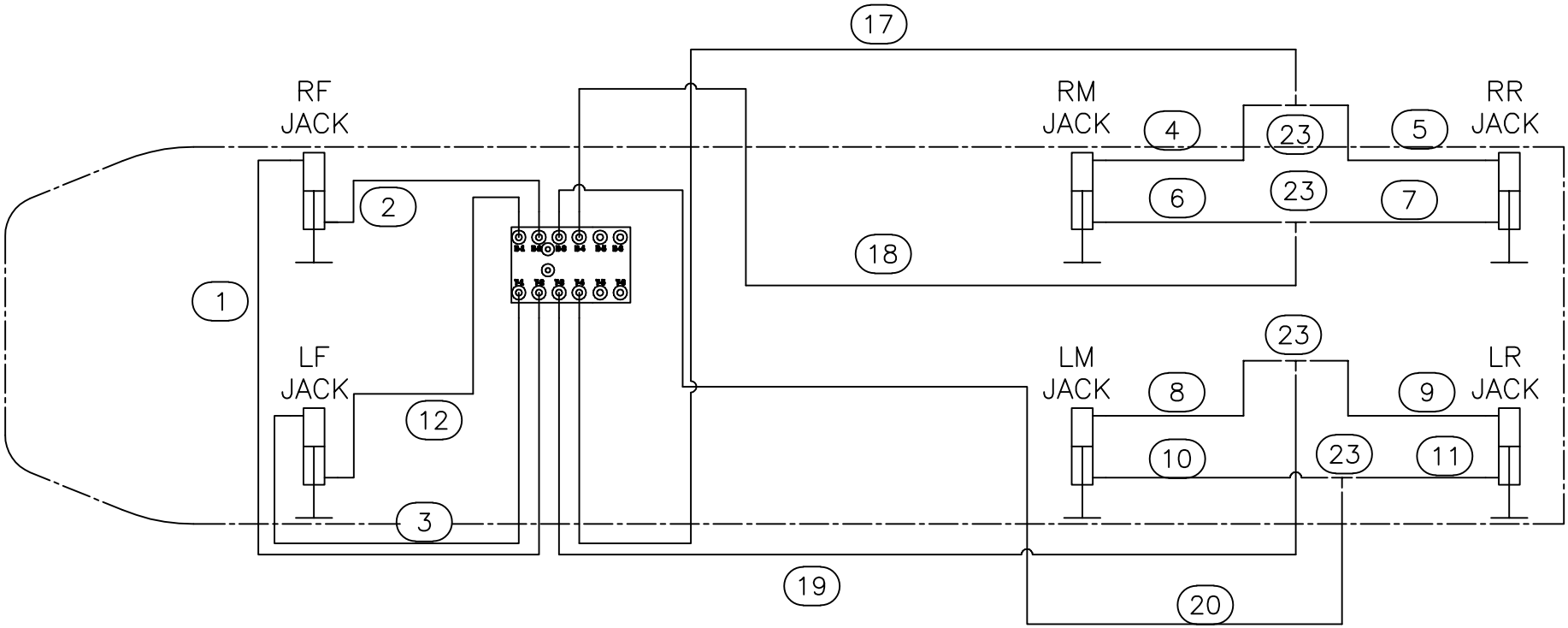

JACK PLUMBING

Warranty authorization must come directly from Equalizer Systems. (800) 846-9659.

Equalizer 55169 COUNTY ROAD 3 ELKHART, IN 46515

NOTICE – This drawing, including principles of design, is the property of Days Corporation, Elkhart, Indiana, with the agreement that it is not to be reproduced, copied, or loaned in any manner that may constitute a detriment directly or indirectly to Days Corporation. Acceptance of this will be construed as an agreement of the above.

#	REVISIONS	BY:	DATE:
A	Changed fitting kit	SJ	1/15/21

UNLESS OTHERWISE SPECIFIED:
TOLERANCES:
.XXX ± 0.010
.XX ± 0.010
.X ± 0.030
ANG. ± 1/2°
REMOVE ALL BURRS AND SHARP EDGES .015 MAX

TITLE: 6 POINT LEVELING HOSE CHART			USED ON: KEYSTONE ALPINE 3850RD
SIZE: A	SCALE: 1: 1	MATERIAL: AS NOTED	
DRW BY: SJ	DATE: 10/11/19	PART NAME: HOSE KIT–8836 ALPINE	
APP'D BY: –	DATE: –	PAGE: 2 OF 3	DWG NO.: 70255	REV: A

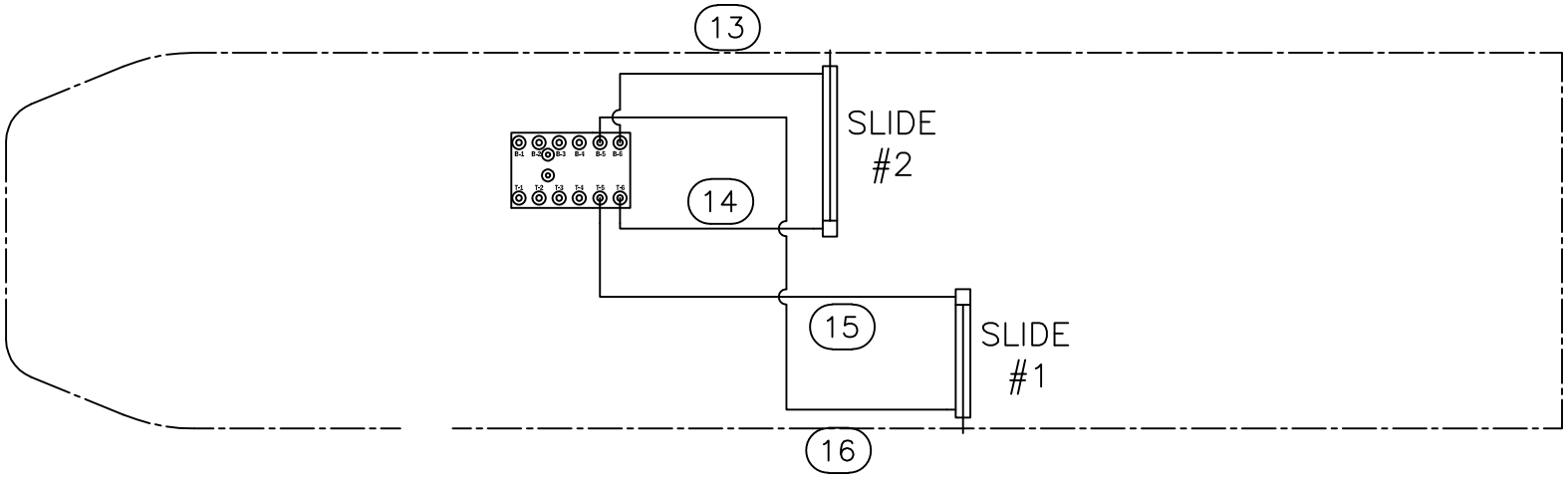

SLIDE CYLINDER PLUMBING

Warranty authorization must come directly from Equalizer Systems. (800) 846-9659.

Equalizer 55169 COUNTY ROAD 3 ELKHART, IN 46515	#	REVISIONS	BY:	DATE:	UNLESS OTHERWISE SPECIFIED: TOLERANCES: .XXX ± 0.010 .XX ± 0.010 .X ± 0.030 ANG. ± 1/2° REMOVE ALL BURRS AND SHARP EDGES .015 MAX	TITLE 6 POINT LEVELING HOSE CHART			USED ON: KEYSTONE ALPINE 3850RD		
	A	Changed fitting kit	SJ	1/15/21		SIZE A	SCALE 1: 1	MATERIAL AS NOTED			
						DRW BY: SJ	DATE: 10/11/19		PART NAME: HOSE KIT–8836 ALPINE		
						APP'D BY –	DATE: –		PAGE: 3 OF 3	DWG NO.: 70255	REV: A

NOTICE – This drawing, including principles of design, is the property of Days Corporation, Elkhart, Indiana, with the agreement that it is not to be reproduced, copied, or loaned in any manner that may constitute a detriment directly or indirectly to Days Corporation. Acceptance of this will be construed as an agreement of the above.

70281 PARTS LIST

ITEM	PART#	DESCRIPTION	QUAN	COLOR CODE	LOCATION
1	2459	HOSE–4'	1	WHITE SOLID	PUMP PORT T2 TO TOP OF RF JACK
2	2461	HOSE–6'	1	WHITE STRIPE	PUMP PORT B2 TO BOTTOM OF RF JACK
3	2465	HOSE–10'	1	BROWN SOLID	PUMP PORT T1 TO TOP OF LF JACK
4	2465	HOSE–10'	1	YELLOW SOLID (2 STICKERS)	TOP OF RM JACK TO TEE
5	2465	HOSE–10'	1	YELLOW SOLID (2 STICKERS)	TOP OF RR JACK TO TEE
6	2465	HOSE–10'	1	YELLOW STRIPE (2 STICKERS)	BOTTOM OF RM JACK TO TEE
7	2465	HOSE–10'	1	YELLOW STRIPE (2 STICKERS)	BOTTOM OF RR JACK TO TEE
8	2465	HOSE–10'	1	ORANGE SOLID (2 STICKERS)	TOP OF LM JACK TO TEE
9	2465	HOSE–10'	1	ORANGE SOLID (2 STICKERS)	TOP OF LR JACK TO TEE
10	2465	HOSE–10'	1	ORANGE STRIPE (2 STICKERS)	BOTTOM OF LM JACK TO TEE
11	2465	HOSE–10'	1	ORANGE STRIPE (2 STICKERS)	BOTTOM OF LR JACK TO TEE
12	2467	HOSE–12'	1	BROWN STRIPE	PUMP PORT B1 TO BOTTOM OF LF JACK
13	2478	HOSE–24'	1	YELLOW STRIPE	PUMP PORT B4 TO TEE
14	2478	HOSE–24'	1	YELLOW SOLID	PUMP PORT T4 TO TEE
15	2527	HOSE–30'	1	ORANGE SOLID	PUMP PORT T3 TO TEE
16	2527	HOSE–30'	1	ORANGE STRIPE	PUMP PORT B3 TO TEE
17	2476	HOSE–22'	1	GREEN SOLID	PUMP PORT T5 TO CLOSED END OF SLIDE CYL #1
18	2478	HOSE–24'	1	GREEN STRIPE	PUMP PORT B5 TO ROD END OF SLIDE CYL #1
19	2482	HOSE–32'	1	PURPLE SOLID	PUMP PORT T6 TO CLOSED END OF SLIDE CYL #2
20	2486	HOSE–36'	1	PURPLE STRIPE	PUMP PORT B6 TO ROD END OF SLIDE CYL #2
21	2486	HOSE–36'	1	GREY SOLID	PUMP PORT T7 TO CLOSED END OF SLIDE CYL #3
22	2482	HOSE–32'	1	GREY STRIPE	PUMP PORT B7 TO ROD END OF SLIDE CYL #3
		7871ALAV FITTING KIT–SIX POINT			
23	1124	FITTING–#4 JIC X #4 OR MALE 90	6	–	BOTTOM OF EACH JACK
24	1190	FITTING–#4 X #4 JIC SWIVEL 90	2	–	90 DEGREE ADAPTER FOR TOP OF JACKS
25	1262	FITTING–UNION TEE	4	–	BETWEEN REAR JACKS
26	1403	FITTING–RESTRICTOR #6 X #4–042"	6	–	TOP OF ALL JACKS

Equalizer 55169 COUNTY ROAD 3
ELKHART, IN 46515

NOTICE – This drawing, including principles of design, is the property of Days Corporation, Elkhart, Indiana, with the agreement that it is not to be reproduced, copied, or loaned in any manner that may constitute a detriment directly or indirectly to Days Corporation. Acceptance of this will be construed as an agreement of the above.

#	REVISIONS	BY:	DATE:
A	Changed fitting kit	SJ	1/15/21

UNLESS OTHERWISE SPECIFIED:
TOLERANCES:
.XXX ± 0.010
.XX ± 0.010
.X ± 0.030
ANG. ± 1/2°
REMOVE ALL BURRS AND SHARP EDGES .015 MAX

TITLE: 6 POINT LEVELING HOSE CHART			USED ON: KEYSTONE AVALANCHE
SIZE: A	SCALE: 1: 1	MATERIAL: AS NOTED	
DRW BY: SJ	DATE: 4/28/20	PART NAME: HOSE KIT–AVALANCHE 8858	
APP'D BY: –	DATE: –	PAGE: 1 OF 3	DWG NO.: 70281 REV: A

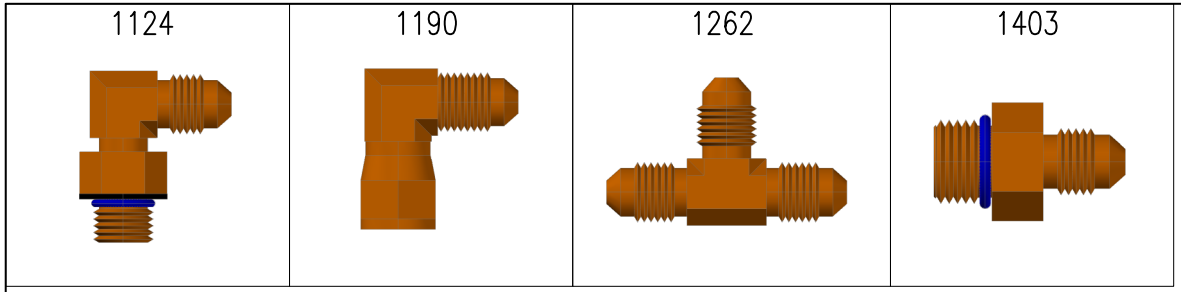

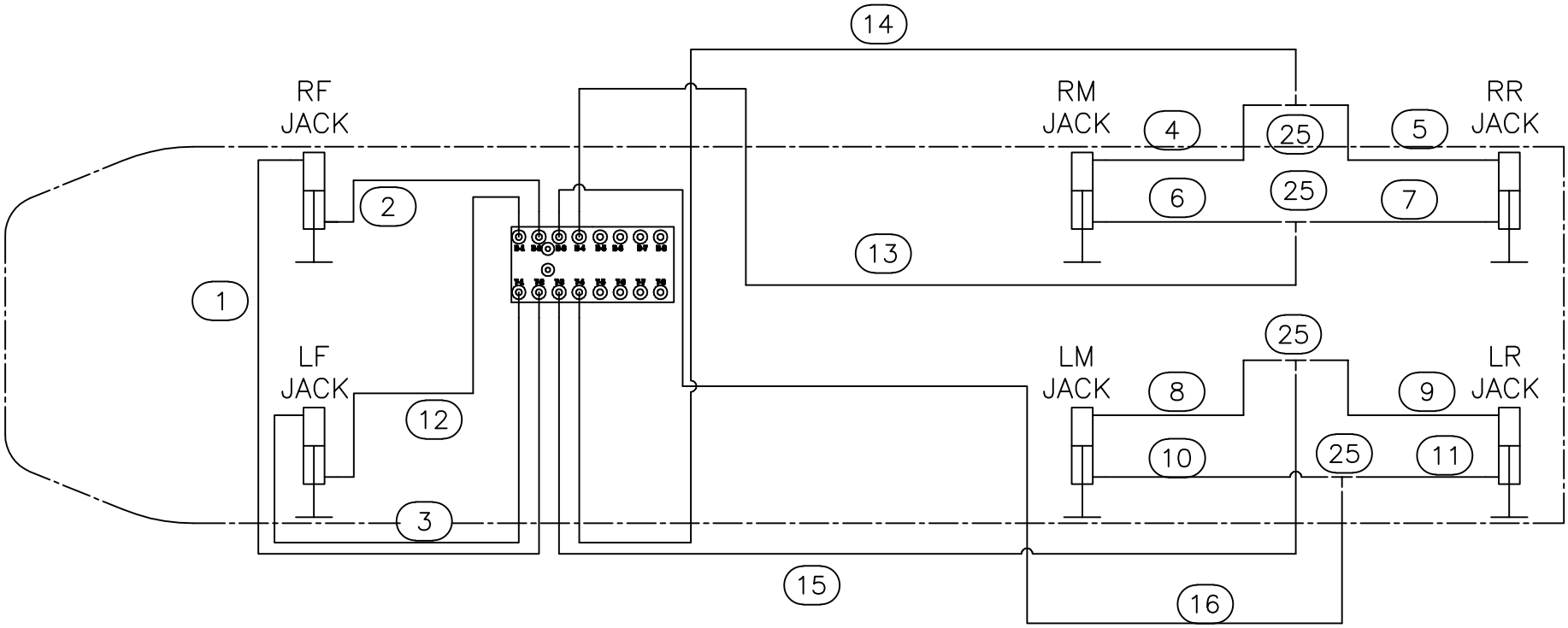

JACK PLUMBING

Warranty authorization must come directly from Equalizer Systems. (800) 846-9659.

Equalizer
55169 COUNTY ROAD 3
ELKHART, IN 46515

NOTICE – This drawing, including principles of design, is the property of Days Corporation, Elkhart, Indiana, with the agreement that it is not to be reproduced, copied, or loaned in any manner that may constitute a detriment directly or indirectly to Days Corporation. Acceptance of this will be construed as an agreement of the above.

#	REVISIONS	BY:	DATE:
A	Changed fitting kit	SJ	1/15/21

UNLESS OTHERWISE SPECIFIED:
TOLERANCES:
.XXX ± 0.010
.XX ± 0.010
.X ± 0.030
ANG. ± 1/2°
REMOVE ALL BURRS AND SHARP EDGES .015 MAX

TITLE: 6 POINT LEVELING HOSE CHART			USED ON: KEYSTONE AVALANCHE
SIZE: A	SCALE: 1: 1	MATERIAL: AS NOTED	
DRW BY: SJ	DATE: 4/28/20	PART NAME: HOSE KIT–AVALANCHE 8858	
APP'D BY: –	DATE: –	PAGE: 2 OF 3	DWG NO.: 70281	REV: A

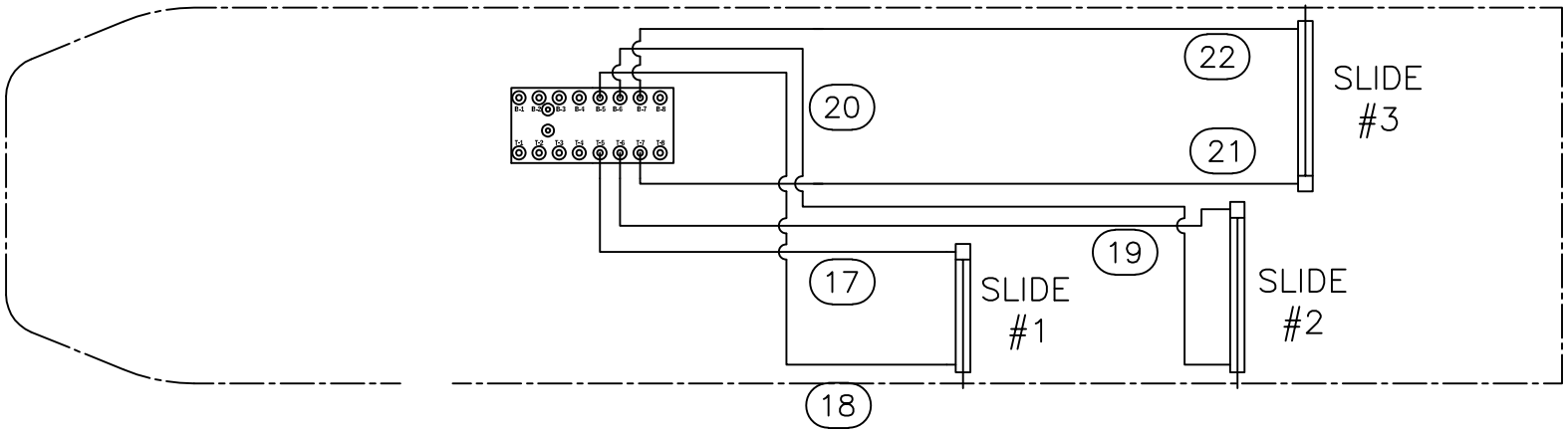

SLIDE CYLINDER PLUMBING

Warranty authorization must come directly from Equalizer Systems. (800) 846-9659.

Equalizer
55169 COUNTY ROAD 3
ELKHART, IN 46515

NOTICE – This drawing, including principles of design, is the property of Days Corporation, Elkhart, Indiana, with the agreement that it is not to be reproduced, copied, or loaned in any manner that may constitute a detriment directly or indirectly to Days Corporation. Acceptance of this will be construed as an agreement of the above.

#	REVISIONS	BY:	DATE:
A	Changed fitting kit	SJ	1/15/21

UNLESS OTHERWISE SPECIFIED:
TOLERANCES:
.XXX ± 0.010
.XX ± 0.010
.X ± 0.030
ANG. ± 1/2°
REMOVE ALL BURRS AND SHARP EDGES .015 MAX

TITLE: 6 POINT LEVELING HOSE CHART			USED ON: KEYSTONE AVALANCHE
SIZE: A	SCALE: 1: 1	MATERIAL: AS NOTED	
DRW BY: SJ	DATE: 10/2/19	PART NAME: HOSE KIT–8835 AVALANCHE	
APP'D BY: –	DATE: –	PAGE: 3 OF 3	DWG NO.: 70251	REV: A

70282 PARTS LIST

ITEM	PART#	DESCRIPTION	QUAN	COLOR CODE	LOCATION
1	2459	HOSE–4'	1	WHITE SOLID	PUMP PORT T2 TO TOP OF RF JACK
2	2461	HOSE–6'	1	WHITE STRIPE	PUMP PORT B2 TO BOTTOM OF RF JACK
3	2465	HOSE–10'	1	BROWN SOLID	PUMP PORT T1 TO TOP OF LF JACK
4	2465	HOSE–10'	1	YELLOW SOLID (2 STICKERS)	TOP OF RM JACK TO TEE
5	2465	HOSE–10'	1	YELLOW SOLID (2 STICKERS)	TOP OF RR JACK TO TEE
6	2465	HOSE–10'	1	YELLOW STRIPE (2 STICKERS)	BOTTOM OF RM JACK TO TEE
7	2465	HOSE–10'	1	YELLOW STRIPE (2 STICKERS)	BOTTOM OF RR JACK TO TEE
8	2465	HOSE–10'	1	ORANGE SOLID (2 STICKERS)	TOP OF LM JACK TO TEE
9	2465	HOSE–10'	1	ORANGE SOLID (2 STICKERS)	TOP OF LR JACK TO TEE
10	2465	HOSE–10'	1	ORANGE STRIPE (2 STICKERS)	BOTTOM OF LM JACK TO TEE
11	2465	HOSE–10'	1	ORANGE STRIPE (2 STICKERS)	BOTTOM OF LR JACK TO TEE
12	2467	HOSE–12'	1	BROWN STRIPE	PUMP PORT B1 TO BOTTOM OF LF JACK
13	3018	HOSE–26'	1	YELLOW STRIPE	PUMP PORT B4 TO TEE
14	3018	HOSE–26'	1	YELLOW SOLID	PUMP PORT T4 TO TEE
15	2482	HOSE–32'	1	ORANGE SOLID	PUMP PORT T3 TO TEE
16	2482	HOSE–32'	1	ORANGE STRIPE	PUMP PORT B3 TO TEE
17	2476	HOSE–22'	1	GREEN SOLID	PUMP PORT T5 TO CLOSED END OF SLIDE CYL #1
18	3018	HOSE–26'	1	GREEN STRIPE	PUMP PORT B5 TO ROD END OF SLIDE CYL #1
19	2488	HOSE–38'	1	PURPLE SOLID	PUMP PORT T6 TO CLOSED END OF SLIDE CYL #2
20	2490	HOSE–40'	1	PURPLE STRIPE	PUMP PORT B6 TO ROD END OF SLIDE CYL #2
21	2488	HOSE–38'	1	GREY SOLID	PUMP PORT T7 TO CLOSED END OF SLIDE CYL #3
22	2484	HOSE–34'	1	GREY STRIPE	PUMP PORT B7 TO ROD END OF SLIDE CYL #3
		7871ALAV FITTING KIT–SIX POINT			
23	1124	FITTING–#4 JIC X #4 OR MALE 90	6	–	BOTTOM OF EACH JACK
24	1190	FITTING–#4 X #4 JIC SWIVEL 90	2	–	90 DEGREE ADAPTER FOR TOP OF JACKS
25	1262	FITTING–UNION TEE	4	–	BETWEEN REAR JACKS
26	1403	FITTING–RESTRICTOR #6 X #4–042"	6	–	TOP OF ALL JACKS

Equalizer 55169 COUNTY ROAD 3
ELKHART, IN 46515

NOTICE – This drawing, including principles of design, is the property of Days Corporation, Elkhart, Indiana, with the agreement that it is not to be reproduced, copied, or loaned in any manner that may constitute a detriment directly or indirectly to Days Corporation. Acceptance of this will be construed as an agreement of the above.

#	REVISIONS	BY:	DATE:
A	Changed fitting kit	SJ	1/15/21

UNLESS OTHERWISE SPECIFIED:
TOLERANCES:
.XXX ± 0.010
.XX ± 0.010
.X ± 0.030
ANG. ± 1/2°
REMOVE ALL BURRS AND SHARP EDGES .015 MAX

TITLE: 6 POINT LEVELING HOSE CHART			USED ON: KEYSTONE AVALANCHE
SIZE: A	SCALE: 1: 1	MATERIAL: AS NOTED	
DRW BY: SJ	DATE: 4/29/20	PART NAME: HOSE KIT–AVALANCHE 8859	
APP'D BY: –	DATE: –	PAGE: 1 OF 3	DWG NO.: 70282 REV: A

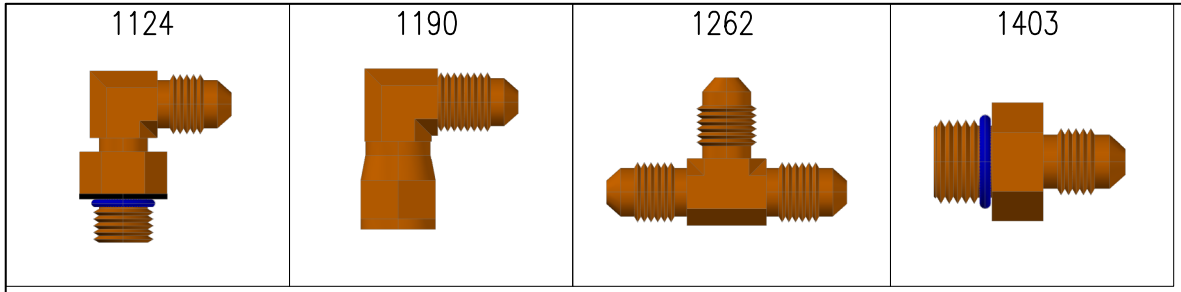

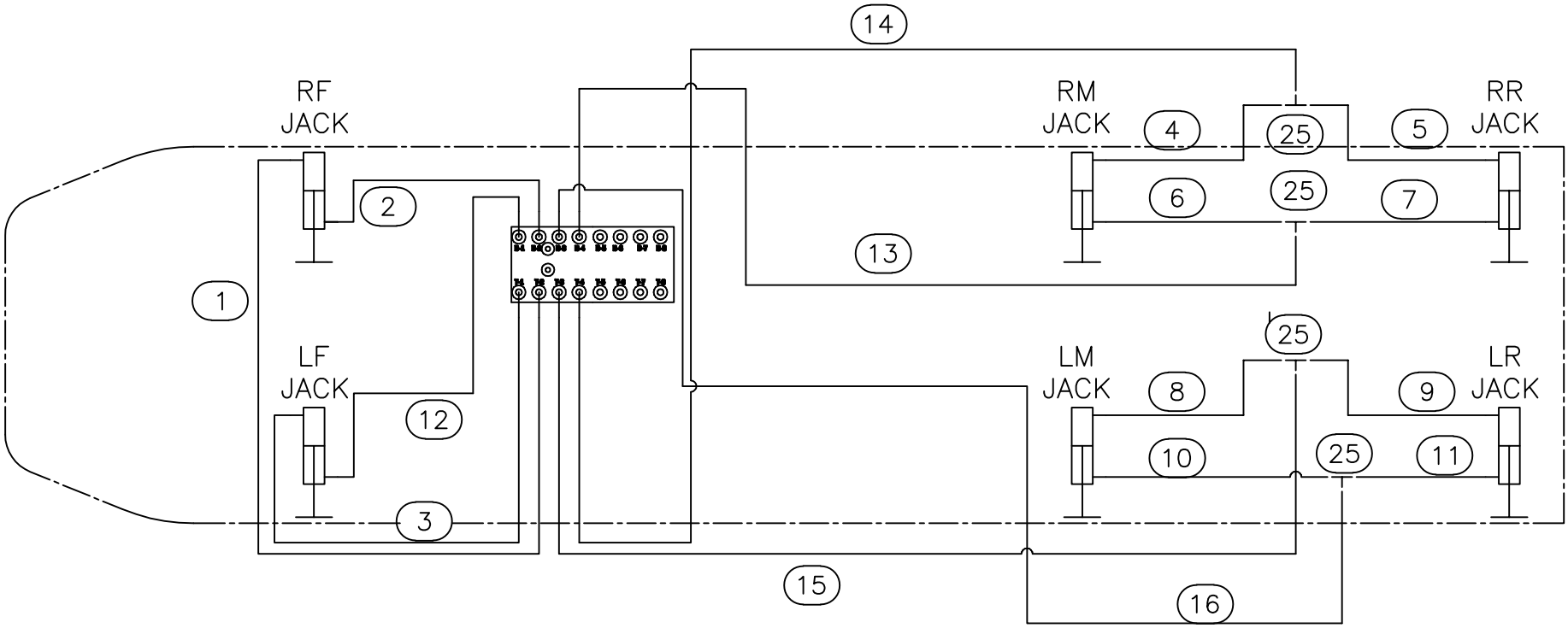

JACK PLUMBING

Warranty authorization must come directly from Equalizer Systems. (800) 846-9659.

Equalizer 55169 COUNTY ROAD 3 ELKHART, IN 46515

NOTICE – This drawing, including principles of design, is the property of Days Corporation, Elkhart, Indiana, with the agreement that it is not to be reproduced, copied, or loaned in any manner that may constitute a detriment directly or indirectly to Days Corporation. Acceptance of this will be construed as an agreement of the above.

#	REVISIONS	BY:	DATE:
A	Changed fitting kit	SJ	1/15/21

UNLESS OTHERWISE SPECIFIED:
TOLERANCES:
.XXX ± 0.010
.XX ± 0.010
.X ± 0.030
ANG. ± 1/2°
REMOVE ALL BURRS AND SHARP EDGES .015 MAX

TITLE: 6 POINT LEVELING HOSE CHART			USED ON: KEYSTONE AVALANCHE
SIZE: A	SCALE: 1: 1	MATERIAL: AS NOTED	
DRW BY: SJ	DATE: 4/29/20		PART NAME: HOSE KIT–AVALANCHE 8859
APP'D BY: –	DATE: –	PAGE: 2 OF 3	DWG NO.: 70282 REV: A

NOTICE – This drawing, including principles of design, is the property of Days Corporation, Elkhart, Indiana, with the agreement that it is not to be reproduced, copied, or loaned in any manner that may constitute a detriment directly or indirectly to Days Corporation. Acceptance of this will be construed as an agreement of the above.

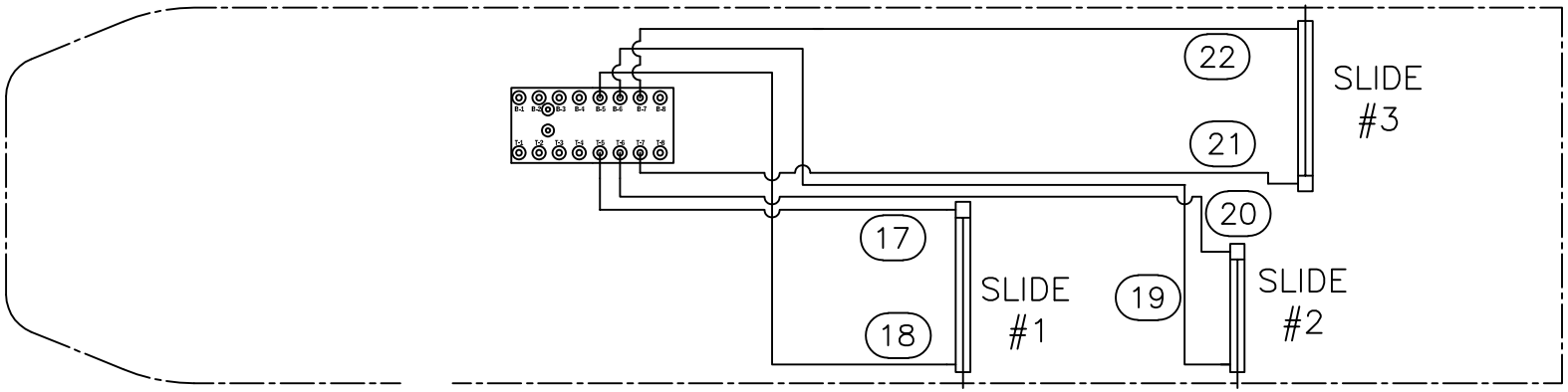

SLIDE CYLINDER PLUMBING

Warranty authorization must come directly from Equalizer Systems. (800) 846-9659.

Equalizer
55169 COUNTY ROAD 3
ELKHART, IN 46515

NOTICE – This drawing, including principles of design, is the property of Days Corporation, Elkhart, Indiana, with the agreement that it is not to be reproduced, copied, or loaned in any manner that may constitute a detriment directly or indirectly to Days Corporation. Acceptance of this will be construed as an agreement of the above.

#	REVISIONS	BY:	DATE:
A	Changed fitting kit	SJ	1/15/21

UNLESS OTHERWISE SPECIFIED:
TOLERANCES:
.XXX ± 0.010
.XX ± 0.010
.X ± 0.030
ANG. ± 1/2°
REMOVE ALL BURRS AND SHARP EDGES .015 MAX

TITLE: 6 POINT LEVELING HOSE CHART			USED ON: KEYSTONE AVALANCHE
SIZE: A	SCALE: 1: 1	MATERIAL: AS NOTED	
DRW BY: SJ	DATE: 4/29/20	PART NAME: HOSE KIT–AVALANCHE 8859	
APP'D BY: –	DATE: –	PAGE: 3 OF 3	DWG NO.: 70282 REV: A

70283 PARTS LIST

ITEM	PART#	DESCRIPTION	QUAN	COLOR CODE	LOCATION
1	2459	HOSE–4'	1	WHITE SOLID	PUMP PORT T2 TO TOP OF RF JACK
2	2461	HOSE–6'	1	WHITE STRIPE	PUMP PORT B2 TO BOTTOM OF RF JACK
3	2465	HOSE–10'	1	BROWN SOLID	PUMP PORT T1 TO TOP OF LF JACK
4	2465	HOSE–10'	1	YELLOW SOLID (2 STICKERS)	TOP OF RM JACK TO TEE
5	2465	HOSE–10'	1	YELLOW SOLID (2 STICKERS)	TOP OF RR JACK TO TEE
6	2465	HOSE–10'	1	YELLOW STRIPE (2 STICKERS)	BOTTOM OF RM JACK TO TEE
7	2465	HOSE–10'	1	YELLOW STRIPE (2 STICKERS)	BOTTOM OF RR JACK TO TEE
8	2465	HOSE–10'	1	ORANGE SOLID (2 STICKERS)	TOP OF LM JACK TO TEE
9	2465	HOSE–10'	1	ORANGE SOLID (2 STICKERS)	TOP OF LR JACK TO TEE
10	2465	HOSE–10'	1	ORANGE STRIPE (2 STICKERS)	BOTTOM OF LM JACK TO TEE
11	2465	HOSE–10'	1	ORANGE STRIPE (2 STICKERS)	BOTTOM OF LR JACK TO TEE
12	2467	HOSE–12'	1	BROWN STRIPE	PUMP PORT B1 TO BOTTOM OF LF JACK
13	3018	HOSE–26'	1	YELLOW STRIPE	PUMP PORT B4 TO TEE
14	3018	HOSE–26'	1	YELLOW SOLID	PUMP PORT T4 TO TEE
15	2482	HOSE–32'	1	ORANGE SOLID	PUMP PORT T3 TO TEE
16	2482	HOSE–32'	1	ORANGE STRIPE	PUMP PORT B3 TO TEE
17	2478	HOSE–24'	1	GREEN SOLID	PUMP PORT T5 TO CLOSED END OF SLIDE CYL #1
18	3018	HOSE–26'	1	GREEN STRIPE	PUMP PORT B5 TO ROD END OF SLIDE CYL #1
19	2488	HOSE–38'	1	PURPLE SOLID	PUMP PORT T6 TO CLOSED END OF SLIDE CYL #2
20	3400	HOSE–42'	1	PURPLE STRIPE	PUMP PORT B6 TO ROD END OF SLIDE CYL #2
21	2478	HOSE–24'	1	GREY SOLID	PUMP PORT T7 TO CLOSED END OF SLIDE CYL #3
22	2475	HOSE–20'	1	GREY STRIPE	PUMP PORT B7 TO ROD END OF SLIDE CYL #3
		7871ALAV FITTING KIT–SIX POINT			
23	1124	FITTING–#4 JIC X #4 OR MALE 90	6	–	BOTTOM OF EACH JACK
24	1190	FITTING–#4 X #4 JIC SWIVEL 90	2	–	90 DEGREE ADAPTER FOR TOP OF JACKS
25	1262	FITTING–UNION TEE	4	–	BETWEEN REAR JACKS
26	1403	FITTING–RESTRICTOR #6 X #4–042"	6	–	TOP OF ALL JACKS

3758SBT SMART LEVEL CONTROL PANEL

INPUT 12V+ FROM PUMP (MINIMUM 10.5V)
INPUT 12V+ FROM PUMP (MINIMUM 10.5V)
INPUT 12V+ TO TOP OF PUMP JACK

PIN	GAGE	COLOR
1	16	RED
2	16	RED
3	16	BLACK

SPLICE TO GROUND
INPUT 12V+ FROM PRESSURE SWITCH
OUTPUT 12V+ TO PUMP RETRACT
OUTPUT 12V+ TO PUMP VALVE RR
OUTPUT 12V+ TO PUMP VALVE LR
OUTPUT 12V+ TO PUMP VALVE RF
OUTPUT 12V+ TO PUMP VALVE LF
OUTPUT 12V+ TO PUMP EXTEND

PIN	GAGE	COLOR
1		
2	18	BLACK/YELLOW
3		
4	18	YELLOW/BLACK
5		
6	18	GREEN
7		
8	18	YELLOW
9	18	ORANGE
10	18	WHITE
11	18	BROWN
12	18	BLUE

NOTES:

1. THE 12V POWER SOURCE MUST NOT DROP BELOW 10.5 VOLTS MEASURED AT THE 6 POINT VALVE HOSE ON THE PUMP ON THE PUMP WHEN THE PUMP IS ENERGIZED WITH THE WIRE GROUND ON THE PUMP CASE GROUND.

Equalizer
55169 COUNTY ROAD 3
ELKHART, IN 46515

#	REVISIONS
A	Changed fitting kit

NOTICE – This drawing, including principles of design, is the property of Days Corporation, Elkhart, Indiana, with the agreement that it is not to be reproduced, copied, or loaned in any manner that may constitute a detriment directly or indirectly to Days Corporation. Acceptance of this will be construed as an agreement of the above.

BY:	DATE:	UNLESS OTHERWISE SPECIFIED TOLERANCES .XX ± 0.010 .XXX ± 0.005 .X ± 0.030 ANG. ± 1/2° REMOVE ALL BURRS AND SHARP EDGES .015 MAX	TITLE: 6 POINT VALVE HOSE CHART	USED ON: KEYSTONE AVALANCHE
SJ	10/5/2021		SCALE: NOTED	MATERIAL: BOM
			DRW BY: SJ	DATE: 4/29/20
			APP'D BY: –	DATE: –

PART NAME:	PAGE:	DWG NO.:	REV:
HOSE KIT–AVALANCHE 8860	1 OF 3	70283	A

Equalizer
ELKHART, IN 46515

#	
A	Added additi

1124	1190	1262	1403
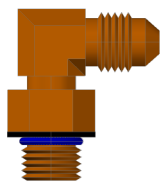	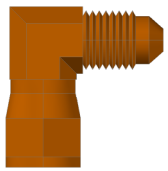	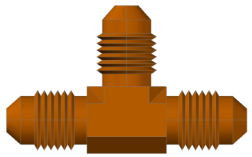	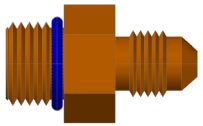

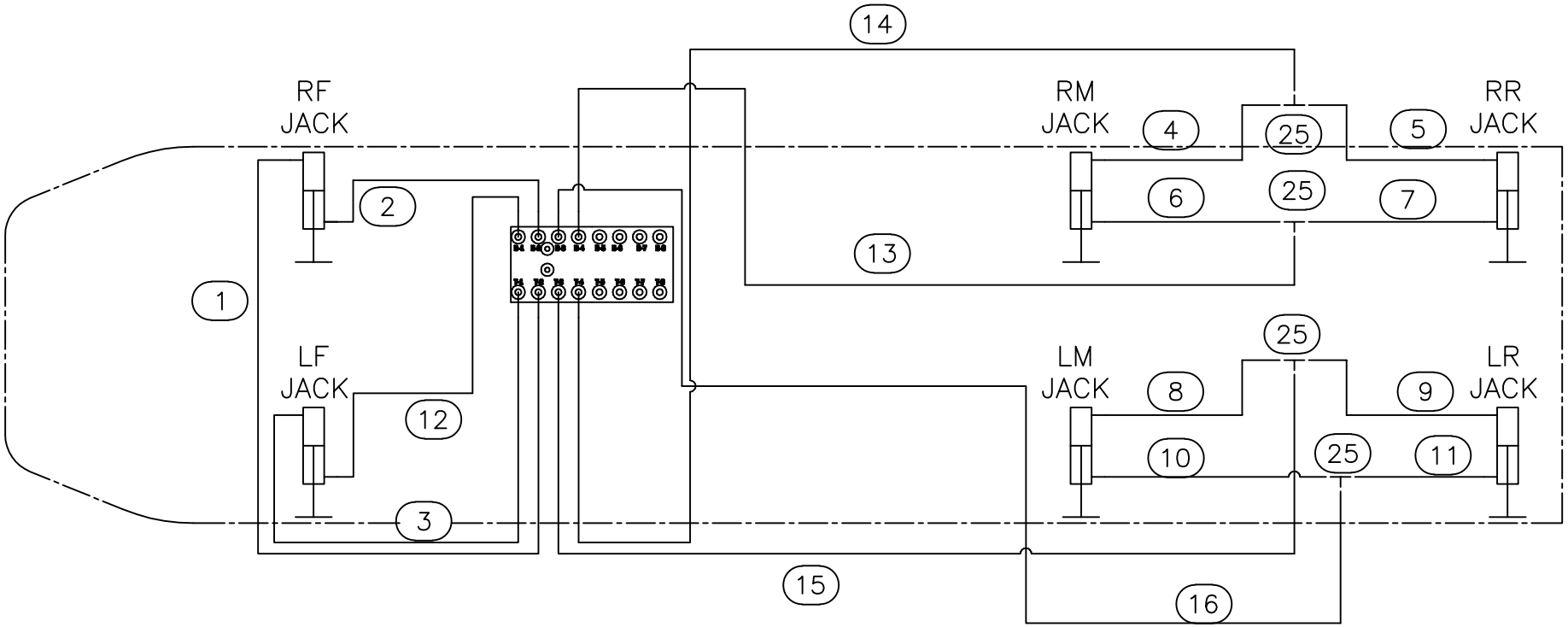

JACK PLUMBING

Warranty authorization must come directly from Equalizer Systems. (800) 846-9659.

Equalizer 55169 COUNTY ROAD 3 ELKHART, IN 46515

NOTICE – This drawing, including principles of design, is the property of Days Corporation, Elkhart, Indiana, with the agreement that it is not to be reproduced, copied, or loaned in any manner that may constitute a detriment directly or indirectly to Days Corporation. Acceptance of this will be construed as an agreement of the above.

#	REVISIONS	BY:	DATE:
A	Changed fitting kit	SJ	1/15/21

UNLESS OTHERWISE SPECIFIED:
TOLERANCES:
.XXX ± 0.010
.XX ± 0.010
.X ± 0.030
ANG. ± 1/2°
REMOVE ALL BURRS AND SHARP EDGES .015 MAX

TITLE: 6 POINT LEVELING HOSE CHART			USED ON: KEYSTONE AVALANCHE
SIZE: A	SCALE: 1:1	MATERIAL: AS NOTED	
DRW BY: SJ	DATE: 4/29/20		PART NAME: HOSE KIT–AVALANCHE 8860
APP'D BY: –	DATE: –	PAGE: 2 OF 3	DWG NO.: 70283 REV: A

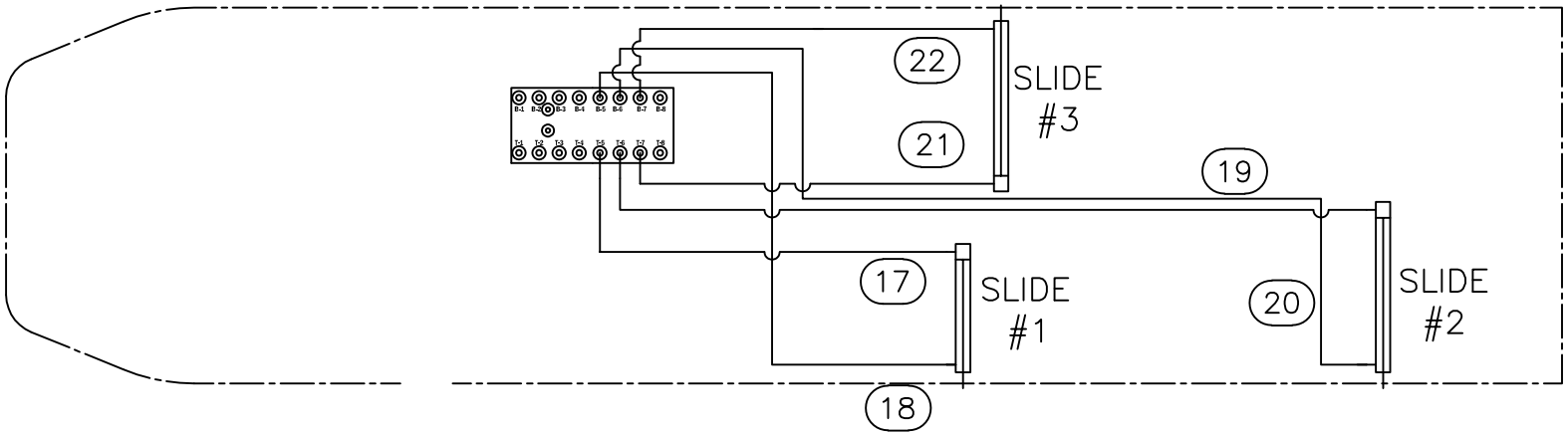

SLIDE CYLINDER PLUMBING

Warranty authorization must come directly from Equalizer Systems. (800) 846-9659.

Equalizer 55169 COUNTY ROAD 3 ELKHART, IN 46515

NOTICE – This drawing, including principles of design, is the property of Days Corporation, Elkhart, Indiana, with the agreement that it is not to be reproduced, copied, or loaned in any manner that may constitute a detriment directly or indirectly to Days Corporation. Acceptance of this will be construed as an agreement of the above.

#	REVISIONS	BY:	DATE:
A	Changed fitting kit	SJ	1/15/21

UNLESS OTHERWISE SPECIFIED:
TOLERANCES:
.XXX ± 0.010
.XX ± 0.010
.X ± 0.030
ANG. ± 1/2°
REMOVE ALL BURRS AND SHARP EDGES .015 MAX

TITLE: 6 POINT LEVELING HOSE CHART			USED ON: KEYSTONE AVALANCHE
SIZE: A	SCALE: 1: 1	MATERIAL: AS NOTED	
DRW BY: SJ	DATE: 4/29/20	PART NAME: HOSE KIT–AVALANCHE 8860	
APP'D BY: –	DATE: –	PAGE: 3 OF 3	DWG NO.: 70283 REV: A

70287 PARTS LIST

ITEM	PART#	DESCRIPTION	QUAN	COLOR CODE	LOCATION
1	2459	HOSE–4'	1	WHITE SOLID	PUMP PORT T2 TO TOP OF RF JACK
2	2461	HOSE–6'	1	WHITE STRIPE	PUMP PORT B2 TO BOTTOM OF RF JACK
3	2465	HOSE–10'	1	BROWN SOLID	PUMP PORT T1 TO TOP OF LF JACK
4	2465	HOSE–10'	1	YELLOW SOLID (2 STICKERS)	TOP OF RM JACK TO TEE
5	2465	HOSE–10'	1	YELLOW SOLID (2 STICKERS)	TOP OF RR JACK TO TEE
6	2465	HOSE–10'	1	YELLOW STRIPE (2 STICKERS)	BOTTOM OF RM JACK TO TEE
7	2465	HOSE–10'	1	YELLOW STRIPE (2 STICKERS)	BOTTOM OF RR JACK TO TEE
8	2465	HOSE–10'	1	ORANGE SOLID (2 STICKERS)	TOP OF LM JACK TO TEE
9	2465	HOSE–10'	1	ORANGE SOLID (2 STICKERS)	TOP OF LR JACK TO TEE
10	2465	HOSE–10'	1	ORANGE STRIPE (2 STICKERS)	BOTTOM OF LM JACK TO TEE
11	2465	HOSE–10'	1	ORANGE STRIPE (2 STICKERS)	BOTTOM OF LR JACK TO TEE
12	2467	HOSE–12'	1	BROWN STRIPE	PUMP PORT B1 TO BOTTOM OF LF JACK
13	2476	HOSE–22'	1	YELLOW SOLID	PUMP PORT T4 TO TEE
14	2476	HOSE–22'	1	YELLOW STRIPE	PUMP PORT B4 TO TEE
15	2535	HOSE–28'	1	ORANGE SOLID	PUMP PORT T3 TO TEE
16	2535	HOSE–28'	1	ORANGE STRIPE	PUMP PORT B3 TO TEE
17	2478	HOSE–24'	1	GREEN SOLID	PUMP PORT T5 TO CLOSED END OF SLIDE CYL #1
18	3018	HOSE–26'	1	GREEN STRIPE	PUMP PORT B5 TO ROD END OF SLIDE CYL #1
19	2482	HOSE–32'	1	PURPLE SOLID	PUMP PORT T6 TO CLOSED END OF SLIDE CYL #2
20	2535	HOSE–28'	1	PURPLE STRIPE	PUMP PORT B6 TO ROD END OF SLIDE CYL #2
		7871ALAV FITTING KIT–SIX POINT			
21	1124	FITTING–#4 JIC X #4 OR MALE 90	6	–	BOTTOM OF EACH JACK
22	1190	FITTING–#4 X #4 JIC SWIVEL 90	2	–	90 DEGREE ADAPTER FOR TOP OF JACKS
23	1262	FITTING–UNION TEE	4	–	BETWEEN REAR JACKS
24	1403	FITTING–RESTRICTOR #6 X #4–042"	6	–	TOP OF ALL JACKS

Equalizer 55169 COUNTY ROAD 3
ELKHART, IN 46515

NOTICE – This drawing, including principles of design, is the property of Days Corporation, Elkhart, Indiana, with the agreement that it is not to be reproduced, copied, or loaned in any manner that may constitute a detriment directly or indirectly to Days Corporation. Acceptance of this will be construed as an agreement of the above.

#	REVISIONS	BY:	DATE:
A	Changed fitting kit	SJ	1/15/21

UNLESS OTHERWISE SPECIFIED:
TOLERANCES:
.XXX ± 0.010
.XX ± 0.010
.X ± 0.030
ANG. ± 1/2°
REMOVE ALL BURRS AND SHARP EDGES .015 MAX

TITLE: 6 POINT LEVELING HOSE CHART			USED ON: KEYSTONE ALPINE/AVALANCHE
SIZE: A	SCALE: 1: 1	MATERIAL: AS NOTED	
DRW BY: SJ	DATE: 4/29/20	PART NAME: HOSE KIT–ALPINE 8864	
APP'D BY: –	DATE: –	PAGE: 1 OF 3	DWG NO.: 70287	REV: A

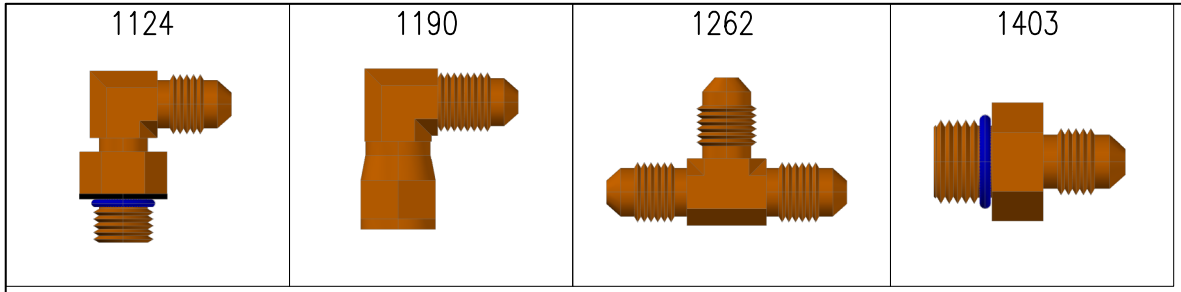

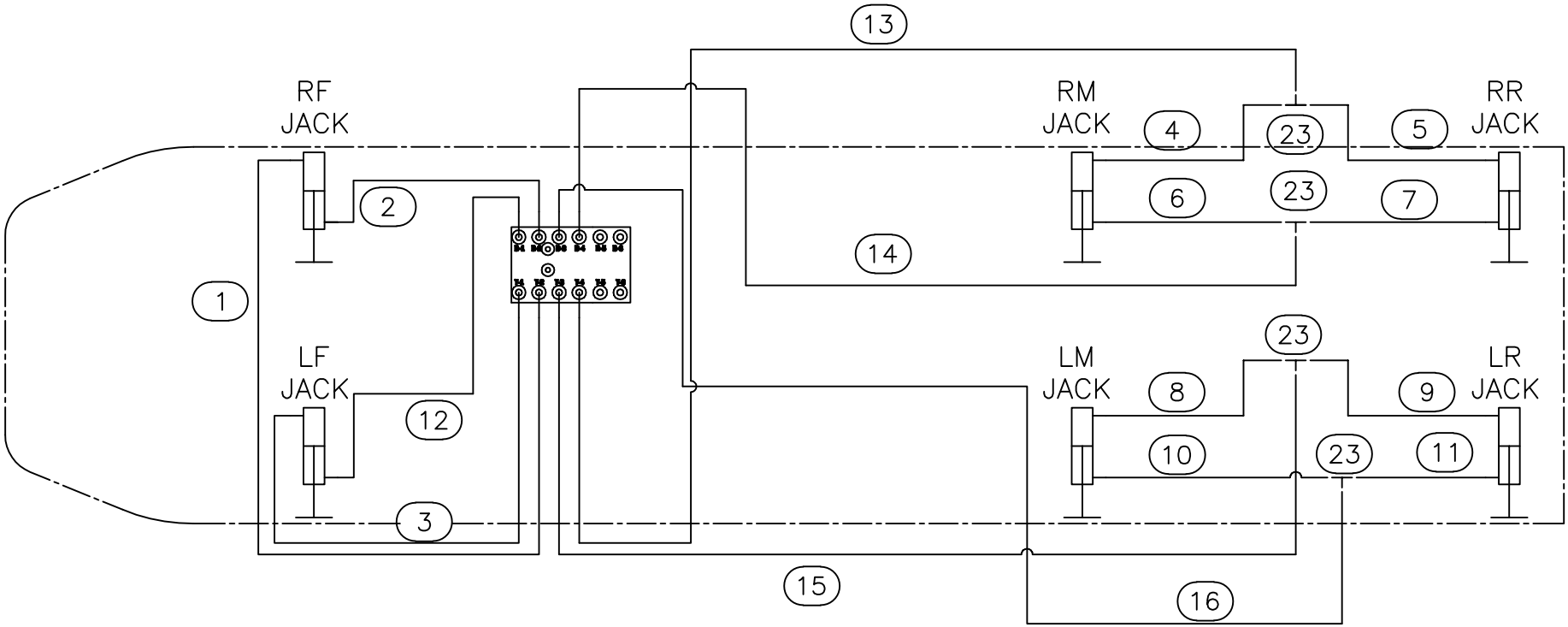

JACK PLUMBING

Warranty authorization must come directly from Equalizer Systems. (800) 846-9659.

Equalizer 55169 COUNTY ROAD 3 ELKHART, IN 46515

NOTICE – This drawing, including principles of design, is the property of Days Corporation, Elkhart, Indiana, with the agreement that it is not to be reproduced, copied, or loaned in any manner that may constitute a detriment directly or indirectly to Days Corporation. Acceptance of this will be construed as an agreement of the above.

#	REVISIONS	BY:	DATE:
A	Changed fitting kit	SJ	1/15/21

UNLESS OTHERWISE SPECIFIED:
TOLERANCES:
.XXX ± 0.010
.XX ± 0.010
.X ± 0.030
ANG. ± 1/2°
REMOVE ALL BURRS AND SHARP EDGES .015 MAX

TITLE: 6 POINT LEVELING HOSE CHART			USED ON: KEYSTONE ALPINE/AVALANCHE
SIZE: A	SCALE: 1: 1	MATERIAL: AS NOTED	
DRW BY: SJ	DATE: 4/29/20	PART NAME: HOSE KIT–ALPINE 8864	
APP'D BY: –	DATE: –	PAGE: 2 OF 3	DWG NO.: 70287	REV: A

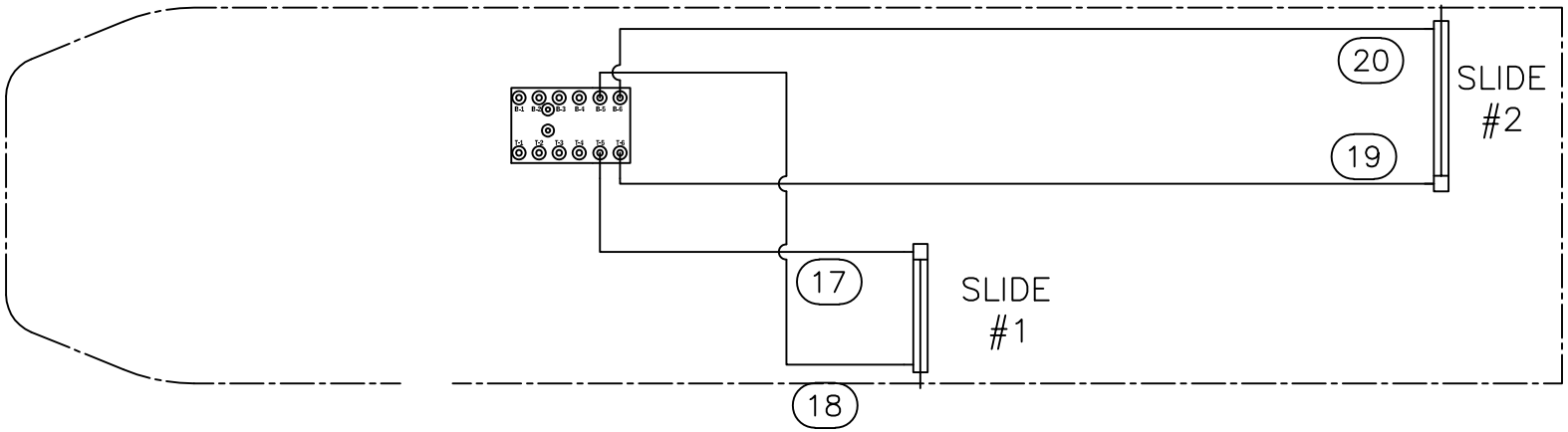

SLIDE CYLINDER PLUMBING

Warranty authorization must come directly from Equalizer Systems. (800) 846-9659.

Equalizer 55169 COUNTY ROAD 3 ELKHART, IN 46515

NOTICE – This drawing, including principles of design, is the property of Days Corporation, Elkhart, Indiana, with the agreement that it is not to be reproduced, copied, or loaned in any manner that may constitute a detriment directly or indirectly to Days Corporation. Acceptance of this will be construed as an agreement of the above.

#	REVISIONS	BY:	DATE:
A	Changed fitting kit	SJ	1/15/21

UNLESS OTHERWISE SPECIFIED:
TOLERANCES:
.XXX ± 0.010
.XX ± 0.010
.X ± 0.030
ANG. ± 1/2°
REMOVE ALL BURRS AND SHARP EDGES .015 MAX

TITLE: 6 POINT LEVELING HOSE CHART			USED ON: KEYSTONE ALPINE/AVALANCHE
SIZE: A	SCALE: 1: 1	MATERIAL: AS NOTED	
DRW BY: SJ	DATE: 4/29/20	PART NAME: HOSE KIT–ALPINE 8864	
APP'D BY: –	DATE: –	PAGE: 3 OF 3	DWG NO.: 70287	REV: A

70297 PARTS LIST					
ITEM	PART #	DESCRIPTION	QUAN	COLOR CODE	LOCATION
1	2459	HOSE - 4'	1	WHITE SOLID	PUMP TO JACK, RIGHT FRONT TOP
2	2461	HOSE - 6'	1	WHITE STRIPE	PUMP TO JACK, RIGHT FRONT BOTTOM
3	2465	HOSE - 10'	2	YELLOW SOLID	TEE TO RR AND RM JACK TOP
4	2465	HOSE - 10'	2	YELLOW STRIPE	TEE TO RR AND RM JACK BOTTOM
5	2465	HOSE - 10'	2	ORANGE SOLID	TEE TO LR AND LM JACK TOP
6	2465	HOSE - 10'	2	ORANGE STRIPE	TEE TO LR AND LM JACK BOTTOM
7	2465	HOSE - 10'	1	BROWN SOLID	PUMP TO JACK, LEFT FRONT TOP
8	2467	HOSE - 12'	1	BROWN STRIPE	PUMP TO JACK, LEFT FRONT BOTTOM
9	2476	HOSE - 22'	1	YELLOW SOLID	PUMP TO TEE, RIGHT REAR TOP
10	2476	HOSE - 22'	1	YELLOW STRIPE	PUMP TO TEE, RIGHT REAR BOTTOM
11	2535	HOSE - 28'	1	ORANGE SOLID	PUMP TO TEE, LEFT REAR TOP
12	2535	HOSE - 28'	1	ORANGE STRIPE	PUMP TO TEE, LEFT REAR BOTTOM
13	2535	HOSE - 28'	1	GREEN SOLID	PUMP TO CLOSED END OF SLIDE CYL.
14	2482	HOSE - 32'	1	GREEN STRIPE	PUMP TO ROD END OF SLIDE CYL.

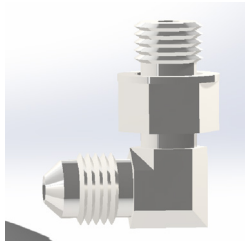

1124

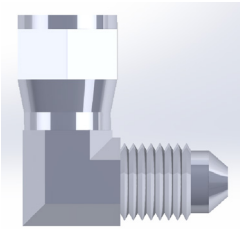

1190

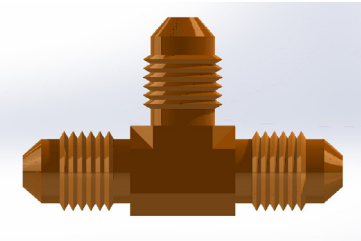

1262

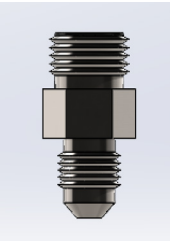

1403

7871ALAV FITTING KIT - SIX POINT					
15	1124	FITTING - #4 JIC X #4 OR MALE 90	6		BOTTOM OF EACH JACK
16	1190	FITTING - #4 X #4 JIC SWIVEL 90	2		90 DEGREE ADAPTER FOR TOP OF JACKS
17	1262	FITTING - UNION TEE	4		BETWEEN REAR JACKS
18	1403	FITTING - RESTRICTOR #6 X #4 - 042"	6		TOP OF ALL JACKS

EQUALIZER SYSTEMS

THE INFORMATION CONTAINED IN THIS DRAWING IS THE SOLE PROPERTY OF DAYS CORPORATION, ELKHART, IN. ANY REPRODUCTION IN PART OR AS A WHOLE WITHOUT THE WRITTEN PERMISSION OF DAYS CORPORATION, ELKHART, IN. IS PROHIBITED.

TITLE: 6 POINT LEVELING HOSE CHART			USED ON: KEYSTONE AVALANCHE 295RK
SIZE: A	SCALE: 1:1	MATERIAL: AS NOTED	
DRAWN BY: RMS	DATE: 8/3/2020	PART NAME: HOSE KIT AVA - 8873	
APP'D BY:	DATE:	PAGE: 1 OF 3	DWG NO: 70297 REV: A

JACK PLUMBING

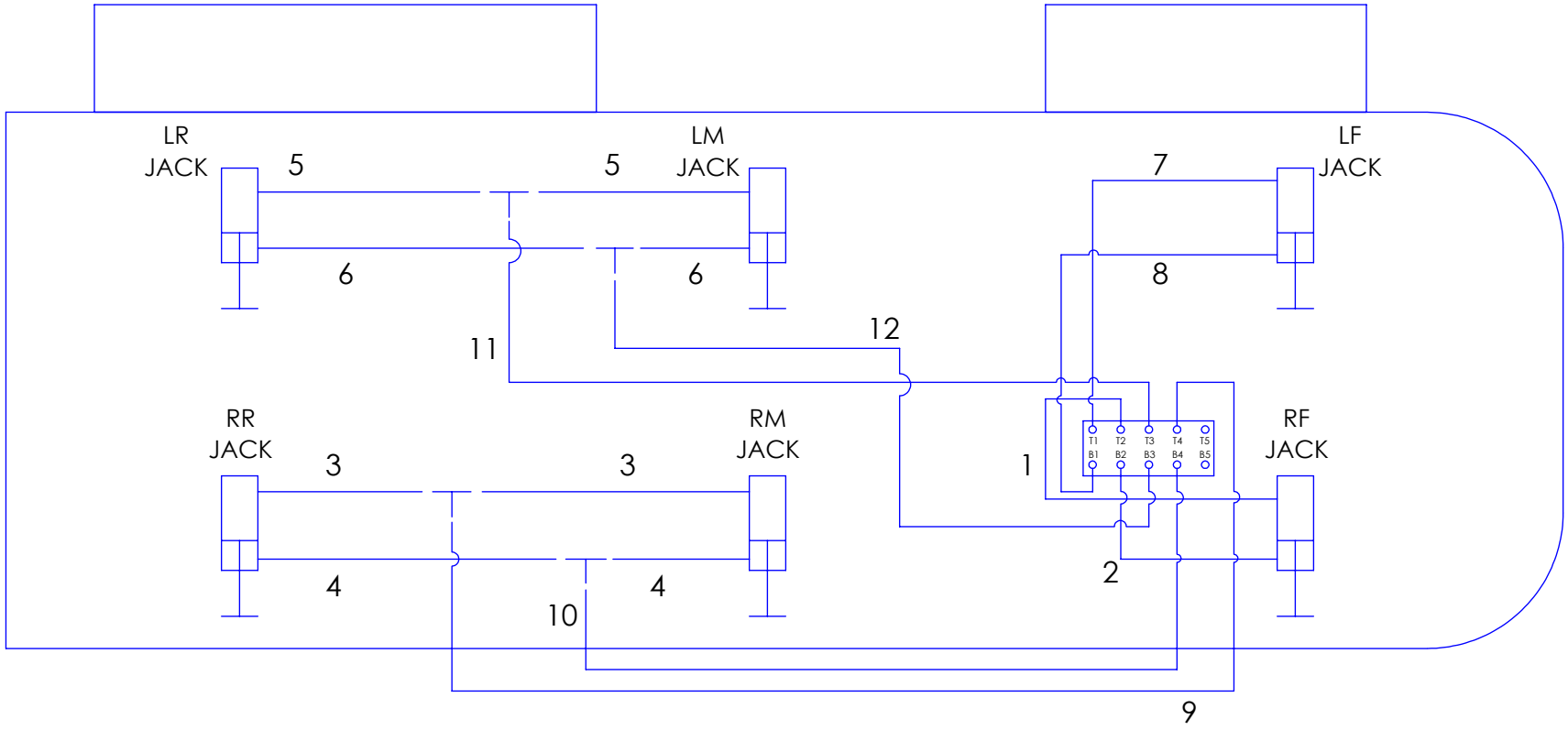

EQUALIZER SYSTEMS	TITLE: 6 POINT LEVELING HOSE CHART		USED ON: KEYSTONE AVALANCHE 295RK	
	SIZE: A	SCALE: 1:1	MATERIAL: AS NOTED	
THE INFORMATION CONTAINED IN THIS DRAWING IS THE SOLE PROPERTY OF DAYS CORPORATION, ELKHART, IN. ANY REPRODUCTION IN PART OR AS A WHOLE WITHOUT THE WRITTEN PERMISSION OF DAYS CORPORATION, ELKHART, IN. IS PROHIBITED.	DRAWN BY: RMS	DATE: 8/3/2020	PART NAME: HOSE KIT AVA - 8873	
	APP'D BY:	DATE:	PAGE: 2 OF 3	DWG NO: 70297	REV: A

SLIDE CYLINDER PLUMBING

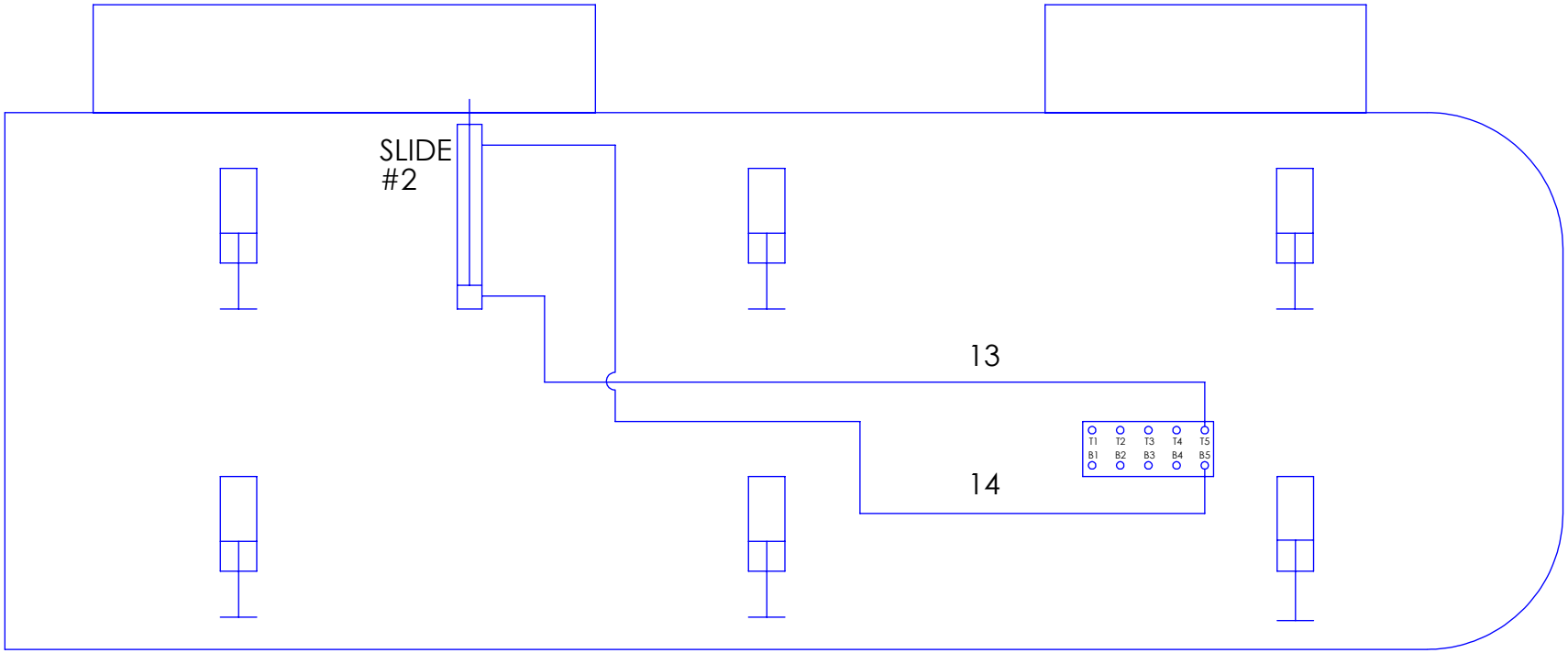

EQUALIZER SYSTEMS	TITLE: 6 POINT LEVELING HOSE CHART		USED ON: KEYSTONE AVALANCHE 295RK	
	SIZE: A	SCALE: 1:1	MATERIAL: AS NOTED	
THE INFORMATION CONTAINED IN THIS DRAWING IS THE SOLE PROPERTY OF DAYS CORPORATION, ELKHART, IN. ANY REPRODUCTION IN PART OR AS A WHOLE WITHOUT THE WRITTEN PERMISSION OF DAYS CORPORATION, ELKHART, IN. IS PROHIBITED.	DRAWN BY: RMS	DATE: 8/3/2020	PART NAME: HOSE KIT AVA - 8873	
	APP'D BY:	DATE:	PAGE: 3 OF 3	DWG NO: 70297	REV: A

70331 PARTS LIST

ITEM	PART #	DESCRIPTION	QUAN	COLOR CODE	LOCATION
1	2459	HOSE - 4'	1	WHITE SOLID	PUMP TO JACK, RIGHT FRONT TOP
2	2461	HOSE - 6'	1	WHITE STRIPE	PUMP TO JACK, RIGHT FRONT BOTTOM
3	2465	HOSE - 10'	2	YELLOW SOLID	TEE TO RR AND RM JACK TOP
4	2465	HOSE - 10'	2	YELLOW STRIPE	TEE TO RR AND RM JACK BOTTOM
5	2465	HOSE - 10'	2	ORANGE SOLID	TEE TO LR AND LM JACK TOP
6	2465	HOSE - 10'	2	ORANGE STRIPE	TEE TO LR AND LM JACK BOTTOM
7	2465	HOSE - 10'	1	BROWN SOLID	PUMP TO JACK, LEFT FRONT TOP
8	2467	HOSE - 12'	1	BROWN STRIPE	PUMP TO JACK, LEFT FRONT BOTTOM
9	2476	HOSE - 22'	1	YELLOW SOLID	PUMP TO TEE, RIGHT REAR TOP
10	2476	HOSE - 22'	1	YELLOW STRIPE	PUMP TO TEE, RIGHT REAR BOTTOM
11	2535	HOSE - 28'	1	ORANGE SOLID	PUMP TO TEE, LEFT REAR TOP
12	2535	HOSE - 28'	1	ORANGE STRIPE	PUMP TO TEE, LEFT REAR BOTTOM
13	2486	HOSE - 36'	1	GREEN SOLID	PUMP TO CLOSED END OF SLIDE CYL. #1
14	2488	HOSE - 38'	1	GREEN STRIPE	PUMP TO ROD END OF SLIDE CYL. #1
15	2486	HOSE - 36'	1	PURPLE SOLID	PUMP TO CLOSED END OF SLIDE CYL. #2
16	2482	HOSE - 32'	1	PURPLE STRIPE	PUMP TO ROD END OF SLIDE CYL. #2

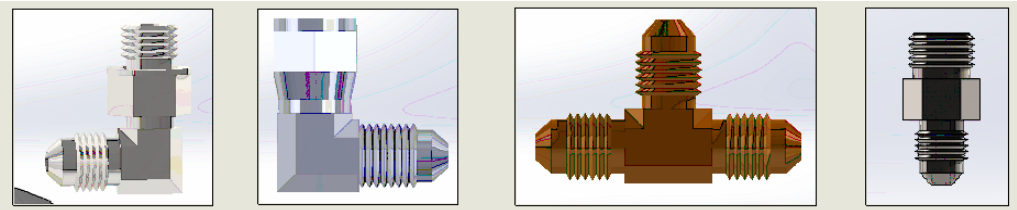

1124 1190 1262 1403

7871ALAV FITTING KIT - SIX POINT

15	1124	FITTING - #4 JIC X #4 OR MALE 90	6		BOTTOM OF EACH JACK
16	1190	FITTING - #4 X #4 JIC SWIVEL 90	2		90 DEGREE ADAPTER FOR TOP OF JACKS
17	1262	FITTING - UNION TEE	4		BETWEEN REAR JACKS
18	1403	FITTING - RESTRICTOR #6 X #4 - 042"	6		TOP OF ALL JACKS

EQUALIZER SYSTEMS
A DAYS COMPANY

THE INFORMATION CONTAINED IN THIS DRAWING IS THE SOLE PROPERTY OF DAYS CORPORATION, ELKHART, IN. ANY REPRODUCTION IN PART OR AS A WHOLE WITHOUT THE WRITTEN PERMISSION OF DAYS CORPORATION, ELKHART, IN. IS PROHIBITED.

TITLE: 6 POINT LEVELING HOSE CHART			USED ON: Avalanche AV322RL
SIZE: A	SCALE: 1:1	MATERIAL: AS NOTED	
DRAWN BY: GSG	DATE: 12/23/2020	PART NAME: HOSE KIT-8969/8971	
APP'D BY:	DATE:	PAGE: 1 OF 3	DWG NO: 70331 REV: A

JACK PLUMBING

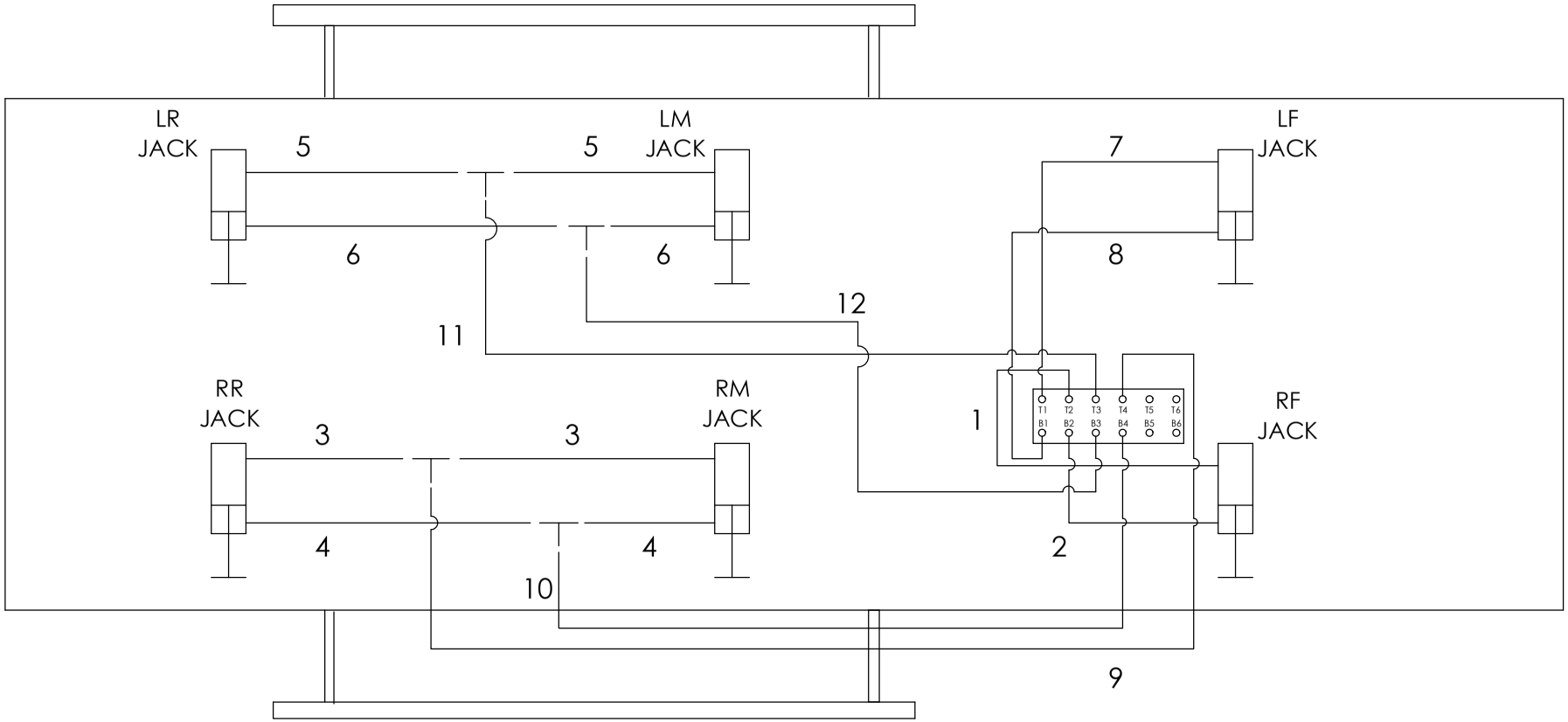

EQUALIZER SYSTEMS A DAYS COMPANY	TITLE: 6 POINT LEVELING HOSE CHART		USED ON: Avalanche AV322RL	
	SIZE: A	SCALE: 1:1	MATERIAL: AS NOTED	
THE INFORMATION CONTAINED IN THIS DRAWING IS THE SOLE PROPERTY OF DAYS CORPORATION, ELKHART, IN. ANY REPRODUCTION IN PART OR AS A WHOLE WITHOUT THE WRITTEN PERMISSION OF DAYS CORPORATION, ELKHART, IN. IS PROHIBITED.	DRAWN BY: GSG	DATE: 12/23/2020	PART NAME: HOSE KIT-8969/8971	
	APP'D BY:	DATE:	PAGE: 2 OF 3	DWG NO: 70331	REV: A

SLIDE CYLINDER PLUMBING

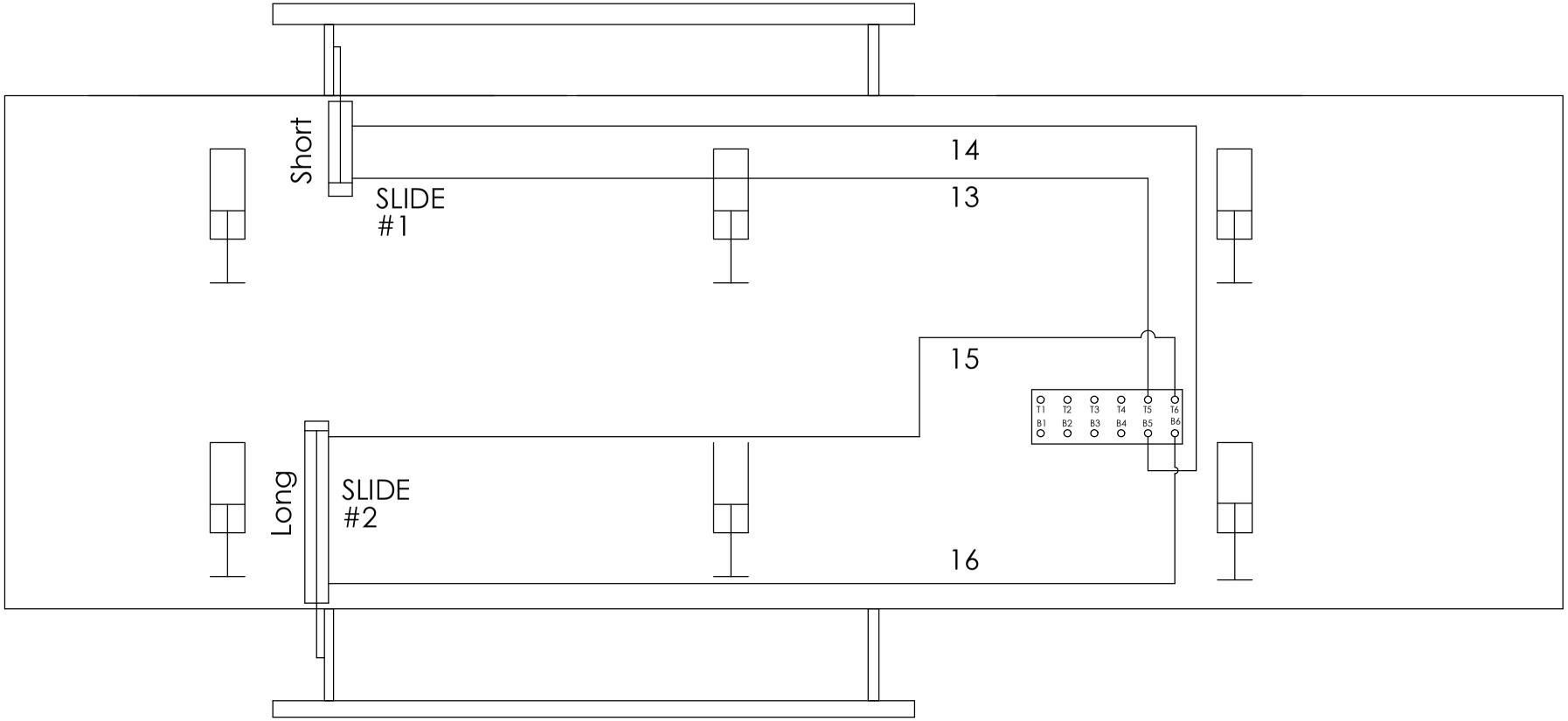

EQUALIZER SYSTEMS
A DAYS COMPANY

THE INFORMATION CONTAINED IN THIS DRAWING IS THE SOLE PROPERTY OF DAYS CORPORATION, ELKHART, IN. ANY REPRODUCTION IN PART OR AS A WHOLE WITHOUT THE WRITTEN PERMISSION OF DAYS CORPORATION, ELKHART, IN. IS PROHIBITED.

TITLE: 6 POINT LEVELING HOSE CHART			USED ON: Avalanche AV322RL
SIZE: A	SCALE: 1:1	MATERIAL: AS NOTED	
DRAWN BY: GSG	DATE: 12/23/2020	PART NAME: HOSE KIT-8969/8971	
APP'D BY:	DATE:	PAGE: 3 OF 3	DWG NO: 70331	REV: A

70332 PARTS LIST

ITEM	PART #	DESCRIPTION	QUAN	COLOR CODE	LOCATION
1	2459	HOSE - 4'	1	WHITE SOLID	PUMP TO JACK, RIGHT FRONT TOP
2	2461	HOSE - 6'	1	WHITE STRIPE	PUMP TO JACK, RIGHT FRONT BOTTOM
3	2465	HOSE - 10'	2	YELLOW SOLID	TEE TO RR AND RM JACK TOP
4	2465	HOSE - 10'	2	YELLOW STRIPE	TEE TO RR AND RM JACK BOTTOM
5	2465	HOSE - 10'	2	ORANGE SOLID	TEE TO LR AND LM JACK TOP
6	2465	HOSE - 10'	2	ORANGE STRIPE	TEE TO LR AND LM JACK BOTTOM
7	2465	HOSE - 10'	1	BROWN SOLID	PUMP TO JACK, LEFT FRONT TOP
8	2467	HOSE - 12'	1	BROWN STRIPE	PUMP TO JACK, LEFT FRONT BOTTOM
9	3018	HOSE - 26'	1	YELLOW SOLID	PUMP TO TEE, RIGHT REAR TOP
10	3018	HOSE - 26'	1	YELLOW STRIPE	PUMP TO TEE, RIGHT REAR BOTTOM
11	2482	HOSE - 32'	1	ORANGE SOLID	PUMP TO TEE, LEFT REAR TOP
12	2482	HOSE - 32'	1	ORANGE STRIPE	PUMP TO TEE, LEFT REAR BOTTOM
13	2478	HOSE - 24'	1	GREEN SOLID	PUMP TO CLOSED END OF SLIDE CYL. #1
14	3018	HOSE - 26'	1	GREEN STRIPE	PUMP TO ROD END OF SLIDE CYL. #1
15	2484	HOSE - 34'	1	PURPLE SOLID	PUMP TO CLOSED END OF SLIDE CYL. #2
16	2527	HOSE - 30'	1	PURPLE STRIPE	PUMP TO ROD END OF SLIDE CYL. #2

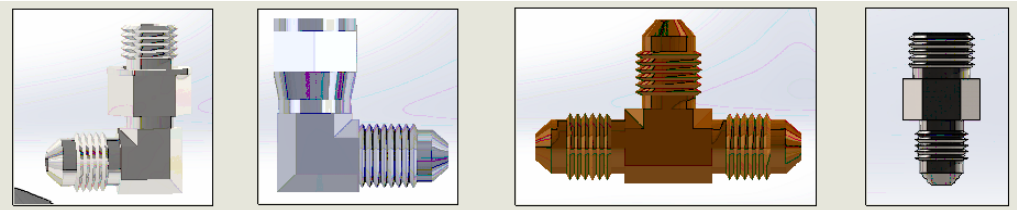

1124 1190 1262 1403

7871ALAV FITTING KIT - SIX POINT

15	1124	FITTING - #4 JIC X #4 OR MALE 90	6		BOTTOM OF EACH JACK
16	1190	FITTING - #4 X #4 JIC SWIVEL 90	2		90 DEGREE ADAPTER FOR TOP OF JACKS
17	1262	FITTING - UNION TEE	4		BETWEEN REAR JACKS
18	1403	FITTING - RESTRICTOR #6 X #4 - 042"	6		TOP OF ALL JACKS

EQUALIZER SYSTEMS
A DAYS COMPANY

THE INFORMATION CONTAINED IN THIS DRAWING IS THE SOLE PROPERTY OF DAYS CORPORATION, ELKHART, IN. ANY REPRODUCTION IN PART OR AS A WHOLE WITHOUT THE WRITTEN PERMISSION OF DAYS CORPORATION, ELKHART, IN. IS PROHIBITED.

TITLE: 6 POINT LEVELING HOSE CHART			USED ON: Avalanche AV390RL
SIZE: A	SCALE: 1:1	MATERIAL: AS NOTED	
DRAWN BY: GSG	DATE: 12/23/2020	PART NAME: HOSE KIT-8970	
APP'D BY:	DATE:	PAGE: 1 OF 3	DWG NO: 70332 REV: A

JACK PLUMBING

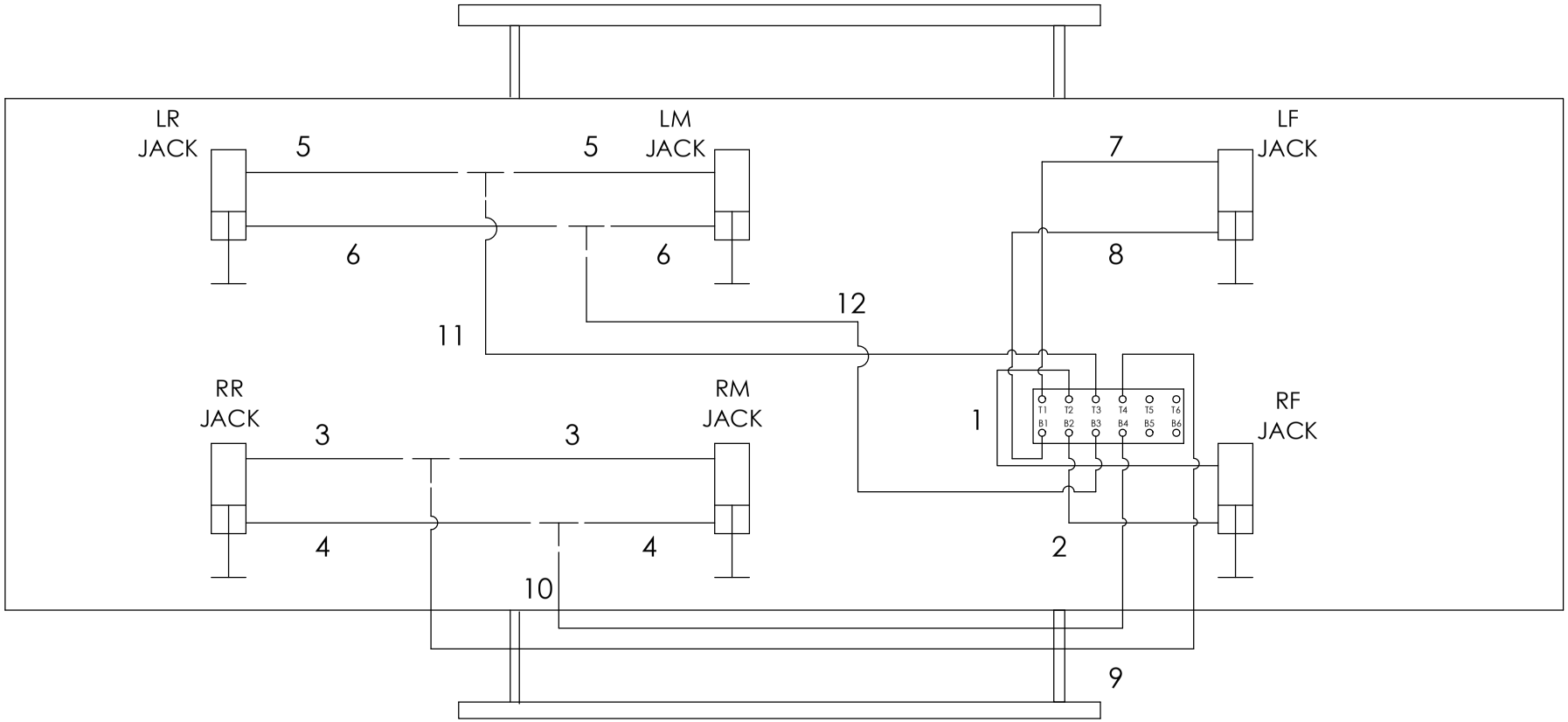

EQUALIZER SYSTEMS A DAYS COMPANY	TITLE: 6 POINT LEVELING HOSE CHART		USED ON: Avalanche AV390RL	
	SIZE: A	SCALE: 1:1	MATERIAL: AS NOTED	
THE INFORMATION CONTAINED IN THIS DRAWING IS THE SOLE PROPERTY OF DAYS CORPORATION, ELKHART, IN. ANY REPRODUCTION IN PART OR AS A WHOLE WITHOUT THE WRITTEN PERMISSION OF DAYS CORPORATION, ELKHART, IN. IS PROHIBITED.	DRAWN BY: GSG	DATE: 12/23/2020	PART NAME: HOSE KIT-8970	
	APP'D BY:	DATE:	PAGE: 2 OF 3	DWG NO: 70332	REV: A

SLIDE CYLINDER PLUMBING

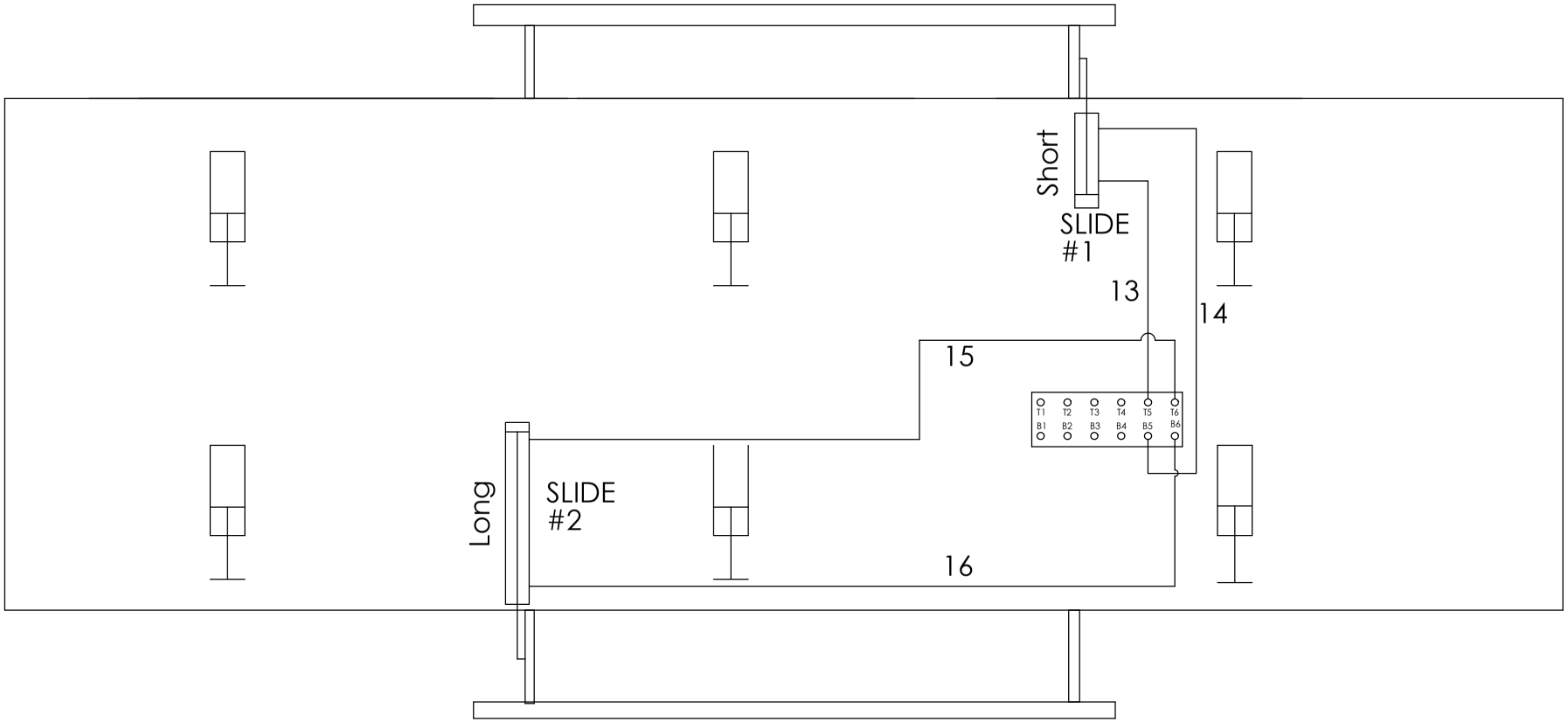

EQUALIZER SYSTEMS A DAYS COMPANY	TITLE: 6 POINT LEVELING HOSE CHART		USED ON: Avalanche AV390RL	
	SIZE: A	SCALE: 1:1	MATERIAL: AS NOTED	
THE INFORMATION CONTAINED IN THIS DRAWING IS THE SOLE PROPERTY OF DAYS CORPORATION, ELKHART, IN. ANY REPRODUCTION IN PART OR AS A WHOLE WITHOUT THE WRITTEN PERMISSION OF DAYS CORPORATION, ELKHART, IN. IS PROHIBITED.	DRAWN BY: GSG	DATE: 12/23/2020	PART NAME: HOSE KIT-8970	
	APP'D BY:	DATE:	PAGE: 3 OF 3	DWG NO: 70332	REV: A

70342 PARTS LIST

ITEM	PART#	DESCRIPTION	QUAN	COLOR CODE	LOCATION
1	2459	HOSE–4'	1	WHITE SOLID	PUMP PORT T2 TO TOP OF RF JACK
2	2461	HOSE–6'	1	WHITE STRIPE	PUMP PORT B2 TO BOTTOM OF RF JACK
3	2465	HOSE–10'	1	BROWN SOLID	PUMP PORT T1 TO TOP OF LF JACK
4	2465	HOSE–10'	1	YELLOW SOLID (2 STICKERS)	TOP OF RM JACK TO TEE
5	2465	HOSE–10'	1	YELLOW SOLID (2 STICKERS)	TOP OF RR JACK TO TEE
6	2465	HOSE–10'	1	YELLOW STRIPE (2 STICKERS)	BOTTOM OF RM JACK TO TEE
7	2465	HOSE–10'	1	YELLOW STRIPE (2 STICKERS)	BOTTOM OF RR JACK TO TEE
8	2465	HOSE–10'	1	ORANGE SOLID (2 STICKERS)	TOP OF LM JACK TO TEE
9	2465	HOSE–10'	1	ORANGE SOLID (2 STICKERS)	TOP OF LR JACK TO TEE
10	2465	HOSE–10'	1	ORANGE STRIPE (2 STICKERS)	BOTTOM OF LM JACK TO TEE
11	2465	HOSE–10'	1	ORANGE STRIPE (2 STICKERS)	BOTTOM OF LR JACK TO TEE
12	2467	HOSE–12'	1	BROWN STRIPE	PUMP PORT B1 TO BOTTOM OF LF JACK
13	2476	HOSE–22'	1	YELLOW STRIPE	PUMP PORT B4 TO TEE
14	2476	HOSE–22'	1	YELLOW SOLID	PUMP PORT T4 TO TEE
15	2535	HOSE–28'	1	ORANGE SOLID	PUMP PORT T3 TO TEE
16	2535	HOSE–28'	1	ORANGE STRIPE	PUMP PORT B3 TO TEE
17	2478	HOSE–24'	1	GREEN SOLID	PUMP PORT T5 TO CLOSED END OF SLIDE CYL #1
18	2535	HOSE–28'	1	GREEN STRIPE	PUMP PORT B5 TO ROD END OF SLIDE CYL #1

7871ALAV FITTING KIT–SIX POINT

23	1124	FITTING–#4 JIC X #4 OR MALE 90	6	–	BOTTOM OF EACH JACK
24	1190	FITTING–#4 X #4 JIC SWIVEL 90	1	–	90 DEGREE ADAPTER FOR TOP OF JACKS
25	1262	FITTING–UNION TEE	4	–	BETWEEN REAR JACKS
26	1403	FITTING–RESTRICTOR #6 X #4–042"	6	–	TOP OF ALL JACKS

EQ SYSTEMS
55169 COUNTY ROAD 3
ELKHART, IN 46515

NOTICE – This drawing, including principles of design, is the property of EQ United, Elkhart, Indiana, with the agreement that it is not to be reproduced, copied, or loaned in any manner that may constitute a detriment directly or indirectly to EQ United Corporation. Acceptance of this will be construed as an agreement of the above.

#	REVISIONS	BY:	DATE:

UNLESS OTHERWISE SPECIFIED:
TOLERANCES:
.XXX ± 0.010
.XX ± 0.010
.X ± 0.030
ANG. ± 1/2°
REMOVE ALL BURRS AND SHARP EDGES .015 MAX

TITLE: 6 POINT LEVELING HOSE CHART			USED ON: KEYSTONE AVALANCHE
SIZE: A	SCALE: 1: 1	MATERIAL: AS NOTED	
DRW BY: SJ	DATE: 2/7/22	PART NAME: HOSE KIT–AVALANCHE 8980	
APP'D BY: –	DATE: –	PAGE: 1 of 3	DWG NO.: 70342 / REV: –

1124	1190	1262	1403
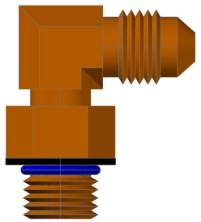	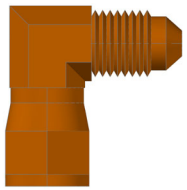	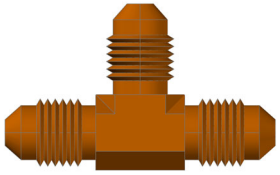	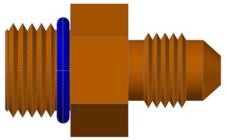

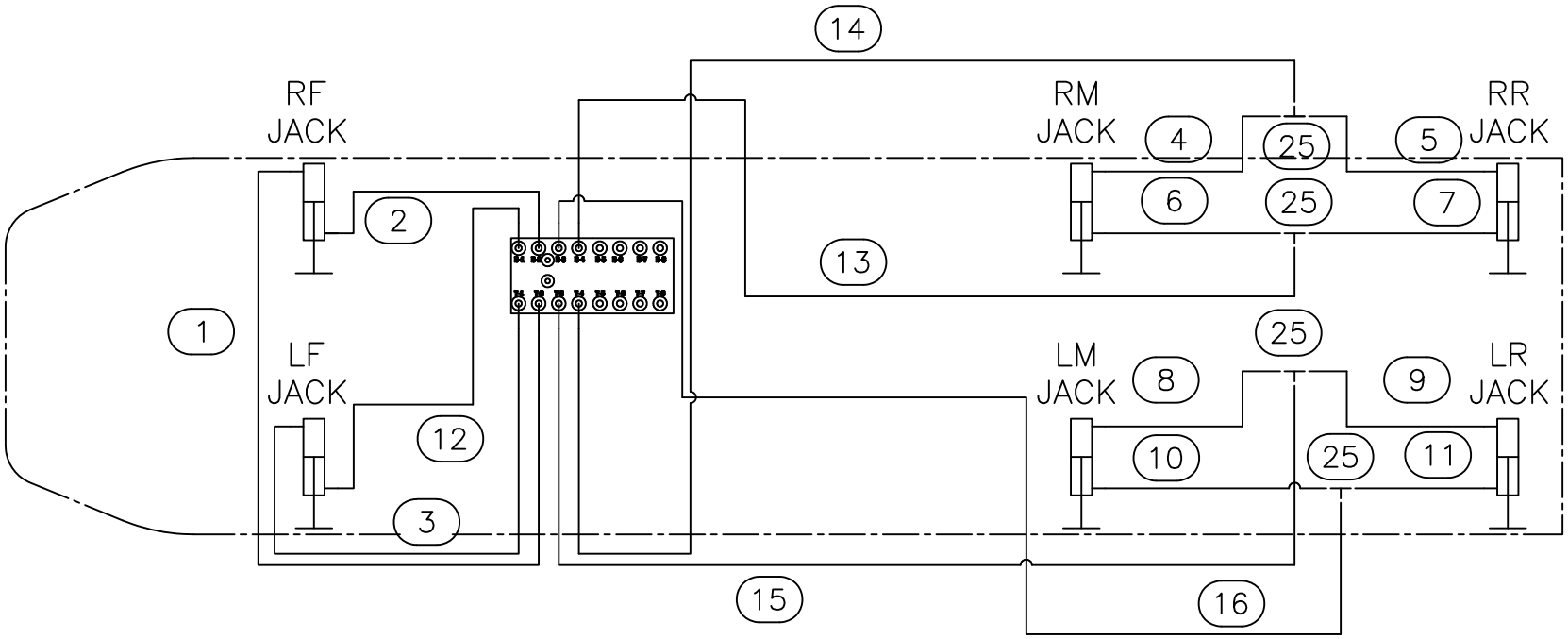

JACK PLUMBING

Warranty authorization must come directly from Equalizer Systems. (800) 846-9659.

EQ SYSTEMS
55169 COUNTY ROAD 3
ELKHART, IN 46515

NOTICE – This drawing, including principles of design, is the property of EQ United, Elkhart, Indiana, with the agreement that it is not to be reproduced, copied, or loaned in any manner that may constitute a detriment directly or indirectly to EQ United Corporation. Acceptance of this will be construed as an agreement of the above.

#	REVISIONS	BY:	DATE:

UNLESS OTHERWISE SPECIFIED:
TOLERANCES:
.XXX ± 0.010
.XX ± 0.010
.X ± 0.030
ANG. ± 1/2°
REMOVE ALL BURRS AND SHARP EDGES .015 MAX

TITLE: 6 POINT LEVELING HOSE CHART			USED ON: KEYSTONE AVALANCHE
SIZE: A	SCALE: 1: 1	MATERIAL: AS NOTED	
DRW BY: SJ	DATE: 2/7/22	PART NAME: HOSE KIT–AVALANCHE 8980	
APP'D BY: –	DATE: –	PAGE: 2 of 3	DWG NO.: 70342 / REV: –

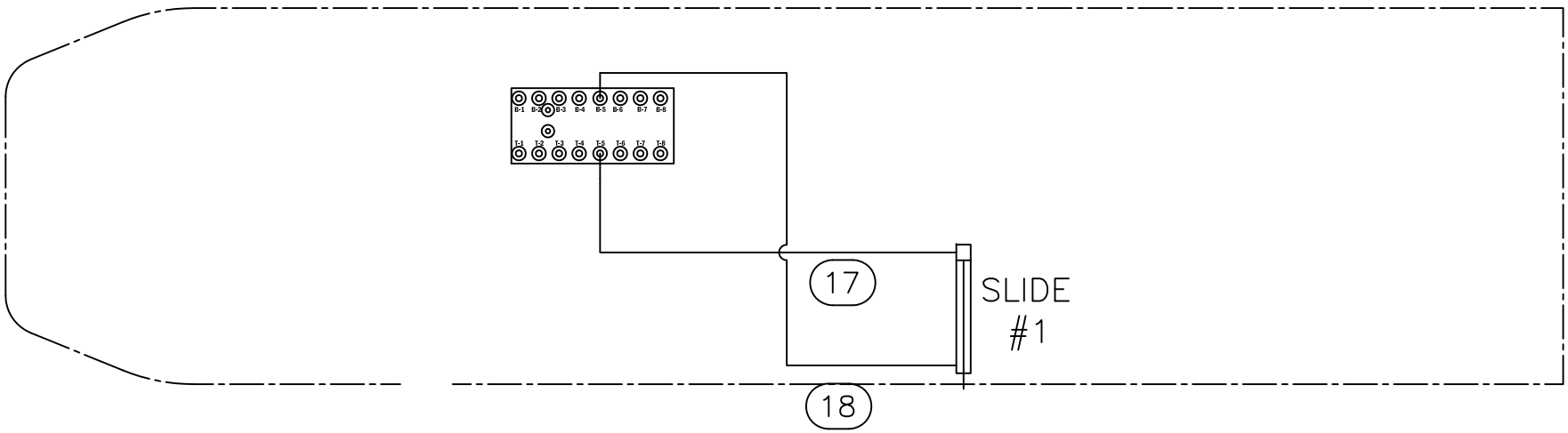

SLIDE CYLINDER PLUMBING

Warranty authorization must come directly from Equalizer Systems. (800) 846-9659.

EQ SYSTEMS
55169 COUNTY ROAD 3
ELKHART, IN 46515

NOTICE – This drawing, including principles of design, is the property of EQ United, Elkhart, Indiana, with the agreement that it is not to be reproduced, copied, or loaned in any manner that may constitute a detriment directly or indirectly to EQ United Corporation. Acceptance of this will be construed as an agreement of the above.

#	REVISIONS	BY:	DATE:

UNLESS OTHERWISE SPECIFIED:
TOLERANCES:
.XXX ± 0.010
.XX ± 0.010
.X ± 0.030
ANG. ± 1/2°
REMOVE ALL BURRS AND SHARP EDGES .015 MAX

TITLE: 6 POINT LEVELING HOSE CHART			USED ON: KEYSTONE AVALANCHE
SIZE: A	SCALE: 1: 1	MATERIAL: AS NOTED	
DRW BY: SJ	DATE: 2/7/22	PART NAME: HOSE KIT–AVALANCHE 8980	
APP'D BY: –	DATE: –	PAGE: 3 of 3	DWG NO.: 70342	REV: –

70345 PARTS LIST

ITEM	PART#	DESCRIPTION	QUAN	COLOR CODE	LOCATION
1	2459	HOSE–4'	1	WHITE SOLID	PUMP PORT T2 TO TOP OF RF JACK
2	2461	HOSE–6'	1	WHITE STRIPE	PUMP PORT B2 TO BOTTOM OF RF JACK
3	2465	HOSE–10'	1	BROWN SOLID	PUMP PORT T1 TO TOP OF LF JACK
4	2465	HOSE–10'	1	YELLOW SOLID (2 STICKERS)	TOP OF RM JACK TO TEE
5	2465	HOSE–10'	1	YELLOW SOLID (2 STICKERS)	TOP OF RR JACK TO TEE
6	2465	HOSE–10'	1	YELLOW STRIPE (2 STICKERS)	BOTTOM OF RM JACK TO TEE
7	2465	HOSE–10'	1	YELLOW STRIPE (2 STICKERS)	BOTTOM OF RR JACK TO TEE
8	2465	HOSE–10'	1	ORANGE SOLID (2 STICKERS)	TOP OF LM JACK TO TEE
9	2465	HOSE–10'	1	ORANGE SOLID (2 STICKERS)	TOP OF LR JACK TO TEE
10	2465	HOSE–10'	1	ORANGE STRIPE (2 STICKERS)	BOTTOM OF LM JACK TO TEE
11	2465	HOSE–10'	1	ORANGE STRIPE (2 STICKERS)	BOTTOM OF LR JACK TO TEE
12	2467	HOSE–12'	1	BROWN STRIPE	PUMP PORT B1 TO BOTTOM OF LF JACK
13	3018	HOSE–26'	1	YELLOW STRIPE	PUMP PORT B4 TO TEE
14	3018	HOSE–26'	1	YELLOW SOLID	PUMP PORT T4 TO TEE
15	2482	HOSE–32'	1	ORANGE SOLID	PUMP PORT T3 TO TEE
16	2482	HOSE–32'	1	ORANGE STRIPE	PUMP PORT B3 TO TEE
17	2476	HOSE–22'	1	GREEN SOLID	PUMP PORT T5 TO CLOSED END OF SLIDE CYL #1
18	3018	HOSE–26'	1	GREEN STRIPE	PUMP PORT B5 TO ROD END OF SLIDE CYL #1
19	2527	HOSE–30'	1	PURPLE SOLID	PUMP PORT T6 TO CLOSED END OF SLIDE CYL #2
20	2482	HOSE–32'	1	PURPLE STRIPE	PUMP PORT B6 TO ROD END OF SLIDE CYL #2
21	2488	HOSE–38'	1	GREY SOLID	PUMP PORT T7 TO CLOSED END OF SLIDE CYL #3
22	2484	HOSE–34'	1	GREY STRIPE	PUMP PORT B7 TO ROD END OF SLIDE CYL #3
		7871ALAV FITTING KIT–SIX POINT			
23	1124	FITTING–#4 JIC X #4 OR MALE 90	6	–	BOTTOM OF EACH JACK
24	1190	FITTING–#4 X #4 JIC SWIVEL 90	1	–	90 DEGREE ADAPTER FOR TOP OF JACKS
25	1262	FITTING–UNION TEE	4	–	BETWEEN REAR JACKS
26	1403	FITTING–RESTRICTOR #6 X #4–042"	6	–	TOP OF ALL JACKS

EQ SYSTEMS
55169 COUNTY ROAD 3
ELKHART, IN 46515

NOTICE – This drawing, including principles of design, is the property of EQ United, Elkhart, Indiana, with the agreement that it is not to be reproduced, copied, or loaned in any manner that may constitute a detriment directly or indirectly to EQ United Corporation. Acceptance of this will be construed as an agreement of the above.

#	REVISIONS	BY:	DATE:

UNLESS OTHERWISE SPECIFIED:
TOLERANCES:
.XXX ± 0.010
.XX ± 0.010
.X ± 0.030
ANG. ± 1/2°
REMOVE ALL BURRS AND SHARP EDGES .015 MAX

TITLE: 6 POINT LEVELING HOSE CHART			USED ON: KEYSTONE ALPINE/AVALANCHE
SIZE: A	SCALE: 1: 1	MATERIAL: AS NOTED	
DRW BY: SJ	DATE: 2/8/22	PART NAME: HOSE KIT–AVALANCHE 8989	
APP'D BY: –	DATE: –	PAGE: 1 of 3	DWG NO.: 70345 REV: –

1124	1190	1262	1403
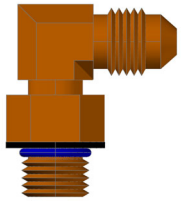	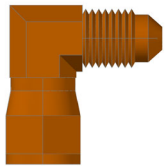	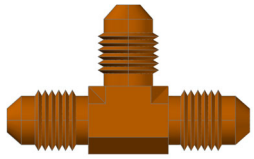	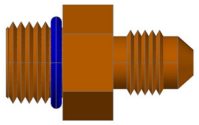

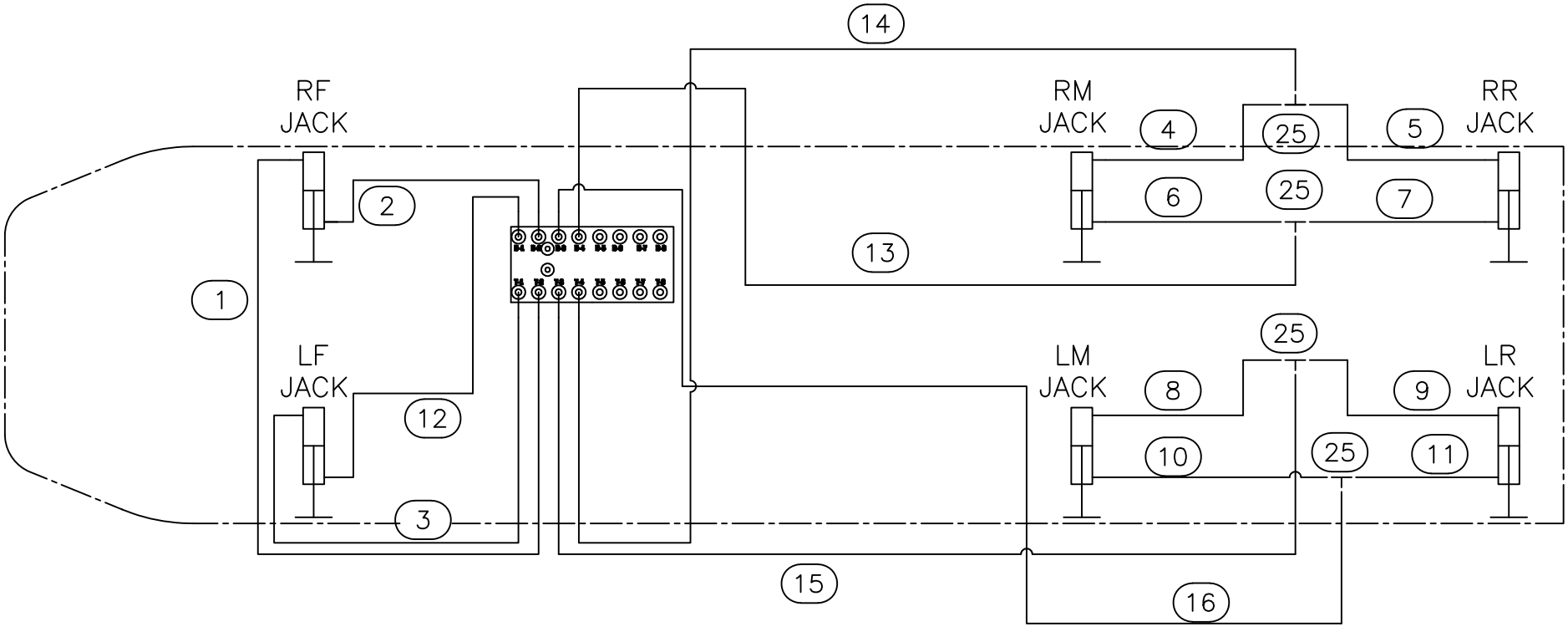

JACK PLUMBING

Warranty authorization must come directly from Equalizer Systems. (800) 846-9659.

EQ SYSTEMS
55169 COUNTY ROAD 3
ELKHART, IN 46515

NOTICE – This drawing, including principles of design, is the property of EQ United, Elkhart, Indiana, with the agreement that it is not to be reproduced, copied, or loaned in any manner that may constitute a detriment directly or indirectly to EQ United Corporation. Acceptance of this will be construed as an agreement of the above.

#	REVISIONS	BY:	DATE:

UNLESS OTHERWISE SPECIFIED:
TOLERANCES:
.XXX ± 0.010
.XX ± 0.010
.X ± 0.030
ANG. ± 1/2°
REMOVE ALL BURRS AND SHARP EDGES .015 MAX

TITLE: 6 POINT LEVELING HOSE CHART			USED ON: KEYSTONE ALPINE/AVALANCHE
SIZE: A	SCALE: 1: 1	MATERIAL: AS NOTED	
DRW BY: SJ	DATE: 2/8/22	PART NAME: HOSE KIT–AVALANCHE 8989	
APP'D BY: –	DATE: –	PAGE: 2 of 3	DWG NO.: 70345 / REV: –

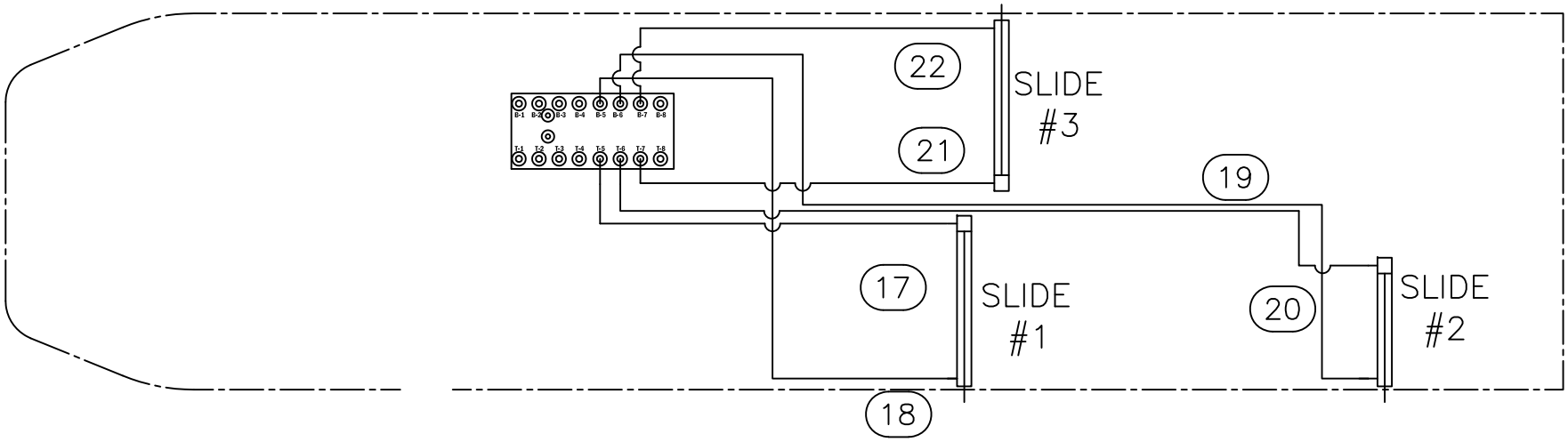

SLIDE CYLINDER PLUMBING

EQ SYSTEMS
55169 COUNTY ROAD 3
ELKHART, IN 46515

NOTICE – This drawing, including principles of design, is the property of EQ United, Elkhart, Indiana, with the agreement that it is not to be reproduced, copied, or loaned in any manner that may constitute a detriment directly or indirectly to EQ United Corporation. Acceptance of this will be construed as an agreement of the above.

#	REVISIONS	BY:	DATE:

UNLESS OTHERWISE SPECIFIED:
TOLERANCES:
.XXX ± 0.010
.XX ± 0.010
.X ± 0.030
ANG. ± 1/2°
REMOVE ALL BURRS AND SHARP EDGES .015 MAX

TITLE: 6 POINT LEVELING HOSE CHART			USED ON: KEYSTONE ALPINE/AVALANCHE
SIZE: A	SCALE: 1: 1	MATERIAL: AS NOTED	
DRW BY: SJ	DATE: 2/8/22	PART NAME: HOSE KIT–AVALANCHE 8989	
APP'D BY: –	DATE: –	PAGE: 3 of 3	DWG NO.: 70345	REV: –

70367 PARTS LIST

ITEM	PART#	DESCRIPTION	QUAN	COLOR CODE	LOCATION
1	2459	HOSE–4'	1	WHITE SOLID	PUMP PORT T2 TO TOP OF RF JACK
2	2461	HOSE–6'	1	WHITE STRIPE	PUMP PORT B2 TO BOTTOM OF RF JACK
3	2465	HOSE–10'	1	BROWN SOLID	PUMP PORT T1 TO TOP OF LF JACK
4	2465	HOSE–10'	1	YELLOW SOLID (2 STICKERS)	TOP OF RM JACK TO TEE
5	2465	HOSE–10'	1	YELLOW SOLID (2 STICKERS)	TOP OF RR JACK TO TEE
6	2465	HOSE–10'	1	YELLOW STRIPE (2 STICKERS)	BOTTOM OF RM JACK TO TEE
7	2465	HOSE–10'	1	YELLOW STRIPE (2 STICKERS)	BOTTOM OF RR JACK TO TEE
8	2465	HOSE–10'	1	ORANGE SOLID (2 STICKERS)	TOP OF LM JACK TO TEE
9	2465	HOSE–10'	1	ORANGE SOLID (2 STICKERS)	TOP OF LR JACK TO TEE
10	2465	HOSE–10'	1	ORANGE STRIPE (2 STICKERS)	BOTTOM OF LM JACK TO TEE
11	2465	HOSE–10'	1	ORANGE STRIPE (2 STICKERS)	BOTTOM OF LR JACK TO TEE
12	2467	HOSE–12'	1	BROWN STRIPE	PUMP PORT B1 TO BOTTOM OF LF JACK
13	2476	HOSE–22'	1	PURPLE STRIPE	PUMP PORT B6 TO ROD END OF SLIDE CYL #2
14	3018	HOSE–26'	1	PURPLE SOLID	PUMP PORT T6 TO CLOSED END OF SLIDE CYL #2
15	2475	HOSE–20'	1	GREEN SOLID	PUMP PORT T5 TO CLOSED END OF SLIDE CYL #1
16	2476	HOSE–22'	1	GREEN STRIPE	PUMP PORT B5 TO ROD END OF SLIDE CYL #1
17	2478	HOSE–24'	1	YELLOW SOLID	PUMP PORT T4 TO TEE
18	2478	HOSE–24'	1	YELLOW STRIPE	PUMP PORT B4 TO TEE
19	2527	HOSE–30'	1	ORANGE SOLID	PUMP PORT T3 TO TEE
20	2527	HOSE–30'	1	ORANGE STRIPE	PUMP PORT B3 TO TEE

7871ALAV FITTING KIT–SIX POINT

21	1124	FITTING–#4 JIC X #4 OR MALE 90	6	–	BOTTOM OF EACH JACK
22	1190	FITTING–#4 X #4 JIC SWIVEL 90	1	–	90 DEGREE ADAPTER FOR TOP OF JACKS
23	1262	FITTING–UNION TEE	4	–	BETWEEN REAR JACKS
24	1403	FITTING–RESTRICTOR #6 X #4–042"	6	–	TOP OF ALL JACKS

EQ SYSTEMS
55169 COUNTY ROAD 3
ELKHART, IN 46515

NOTICE – This drawing, including principles of design, is the property of EQ United, Elkhart, Indiana, with the agreement that it is not to be reproduced, copied, or loaned in any manner that may constitute a detriment directly or indirectly to EQ United Corporation. Acceptance of this will be construed as an agreement of the above.

#	REVISIONS	BY:	DATE:

UNLESS OTHERWISE SPECIFIED:
TOLERANCES:
.XXX ± 0.010
.XX ± 0.010
.X ± 0.030
ANG. ± 1/2°
REMOVE ALL BURRS AND SHARP EDGES .015 MAX

TITLE: 6 POINT LEVELING HOSE CHART			USED ON: KEYSTONE AVALANCHE 353FL
SIZE: A	SCALE: 1: 1	MATERIAL: AS NOTED	
DRW BY: SJ	DATE: 2/7/22	PART NAME: HOSE KIT–8992 AVALANCHE	
APP'D BY: –	DATE: –	PAGE: 1 of 3	DWG NO.: 70367 / REV: –

1124	1190	1262	1403
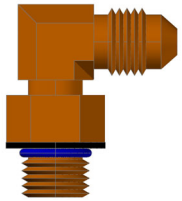	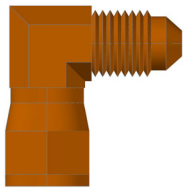	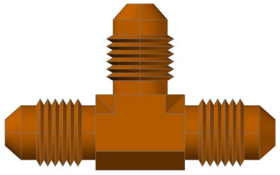	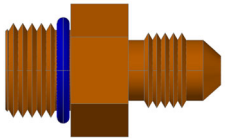

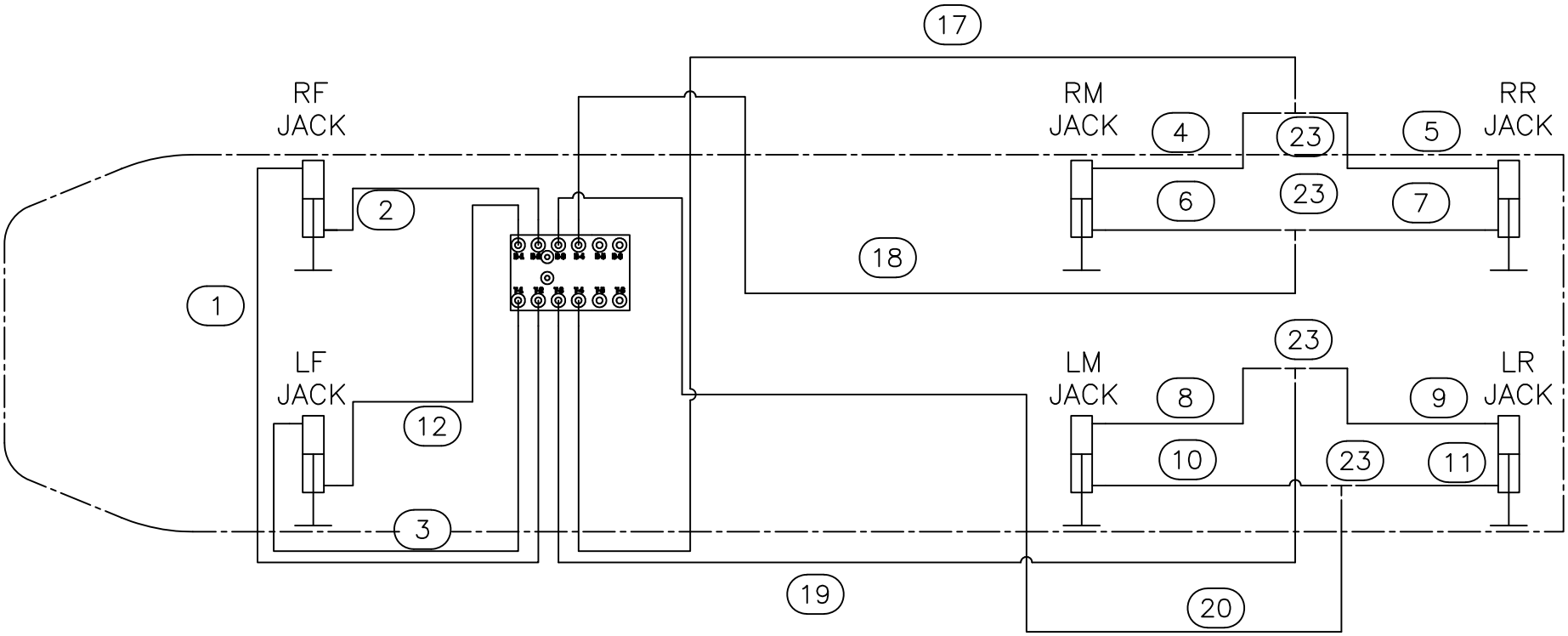

JACK PLUMBING

Warranty authorization must come directly from Equalizer Systems. (800) 846-9659.

EQ SYSTEMS
55169 COUNTY ROAD 3
ELKHART, IN 46515

NOTICE – This drawing, including principles of design, is the property of EQ United, Elkhart, Indiana, with the agreement that it is not to be reproduced, copied, or loaned in any manner that may constitute a detriment directly or indirectly to EQ United Corporation. Acceptance of this will be construed as an agreement of the above.

#	REVISIONS	BY:	DATE:

UNLESS OTHERWISE SPECIFIED:
TOLERANCES:
.XXX ± 0.010
.XX ± 0.010
.X ± 0.030
ANG. ± 1/2°
REMOVE ALL BURRS AND SHARP EDGES .015 MAX

TITLE: 6 POINT LEVELING HOSE CHART			USED ON: KEYSTONE AVALANCHE 353FL
SIZE: A	SCALE: 1: 1	MATERIAL: AS NOTED	
DRW BY: SJ	DATE: 2/7/22	PART NAME: HOSE KIT–8992 AVALANCHE	
APP'D BY: –	DATE: –	PAGE: 2 of 3	DWG NO.: 70367 — REV: –

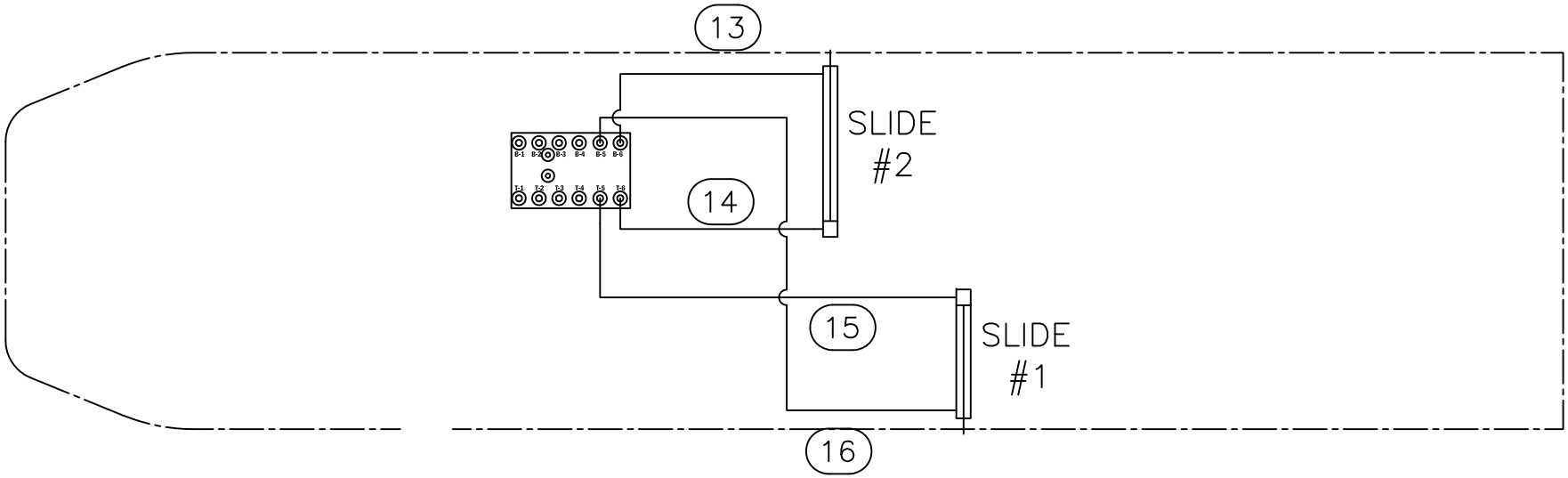

SLIDE CYLINDER PLUMBING

Warranty authorization must come directly from Equalizer Systems. (800) 846-9659.

EQ SYSTEMS
55169 COUNTY ROAD 3
ELKHART, IN 46515

NOTICE – This drawing, including principles of design, is the property of EQ United, Elkhart, Indiana, with the agreement that it is not to be reproduced, copied, or loaned in any manner that may constitute a detriment directly or indirectly to EQ United Corporation. Acceptance of this will be construed as an agreement of the above.

#	REVISIONS	BY:	DATE:

UNLESS OTHERWISE SPECIFIED:
TOLERANCES:
.XXX ± 0.010
.XX ± 0.010
.X ± 0.030
ANG. ± 1/2°
REMOVE ALL BURRS AND SHARP EDGES .015 MAX

TITLE: 6 POINT LEVELING HOSE CHART			USED ON: KEYSTONE AVALANCHE 353FL
SIZE: A	SCALE: 1: 1	MATERIAL: AS NOTED	
DRW BY: SJ	DATE: 2/7/22	PART NAME: HOSE KIT–8992 AVALANCHE	
APP'D BY: –	DATE: –	PAGE: 2 of 3	DWG NO.: 70367 / REV: –

TOLERANCES:	SIZE	SCALE	MATERIAL		
.XXX ± 0.010	A	1: 1	AS NOTED		
.XX ± 0.010	DRW BY: SJ	DATE: 4/29/20	PART NAME: HOSE KIT–AVALANCHE 8860		
.X ± 0.030					
ANG. ± 1/2'					
REMOVE ALL BURRS AND SHARP EDGES .015 MAX	APP'D BY –	DATE: –	PAGE: 2 OF 3	DWG NO.: 70283	REV: A

6150–15 PUMP TO CONTROL PANEL HARNESS

3758SBT SMART LEVEL CONTROL PANEL

PARTS LIST		
	COLOR CODE	LOCATION
	D	PUMP PORT T2 TO TOP OF RF JACK
	PE	PUMP PORT B2 TO BOTTOM OF RF JACK
	LID	PUMP PORT T1 TO TOP OF LM JACK
	LID (2 STICKERS)	TOP OF RM JACK TO TEE
	LID (2 STICKERS)	TOP OF RR JACK TO TEE
	RIPE (2 STICKERS)	BOTTOM OF RM JACK TO TEE
	RIPE (2 STICKERS)	BOTTOM OF RR JACK TO TEE
	LID (2 STICKERS)	TOP OF LM JACK TO TEE
	LID (2 STICKERS)	TOP OF LR JACK TO TEE
	RIPE (2 STICKERS)	BOTTOM OF LM JACK TO TEE
	RIPE (2 STICKERS)	BOTTOM OF LR JACK TO TEE
	RIPE	PUMP PORT B1 TO BOTTOM OF LF JACK
	RIPE	PUMP PORT B4 TO TEE
	LID	PUMP PORT T4 TO TEE
	LID	PUMP PORT T3 TO TEE
	RIPE	PUMP PORT B3 TO TEE
	LID	PUMP PORT T5 TO CLOSED END OF SLIDE CYL #1
	RIPE	PUMP PORT B5 TO ROD END OF SLIDE CYL #1
	LID	PUMP PORT T6 TO CLOSED END OF SLIDE CYL #2
	RIPE	PUMP PORT B6 TO ROD END OF SLIDE CYL #2
	D	PUMP PORT T7 TO CLOSED END OF SLIDE CYL #3
	PE	PUMP PORT B7 TO ROD END OF SLIDE CYL #3
	TING KIT–SIX POINT	
		BOTTOM OF EACH JACK
		90 DEGREE ADAPTER FOR TOP OF JACKS
		BETWEEN REAR JACKS
		TOP OF ALL JACKS

NOTES:

THE 12V POWER SOURCE MUST NOT DROP BELOW 10.5 VOLTS MEASURED AT THE POINT OF LEVELING HARDWARE ON THE PUMP CONTROL PANEL WHEN ENERGIZED WITH THE OTHER GROUND ON THE PUMP CASE GROUND.

BY:	DATE:	UNLESS OTHERWISE SPECIFIED: TOLERANCES: .XXX ± 0.010 .XX ± 0.010 .X ± 0.030 ANG. ± 1/2'	TITLE: 6150–15 PUMP TO CONTROL PANEL HARNESS	USED ON: KEYSTONE AVALANCHE
SJ	5/13/21		SIZE: A SCALE: 1: 1 MATERIAL: AS NOTED	
		REMOVE ALL BURRS AND SHARP EDGES .015 MAX	DRW BY: SJ DATE: 4/29/20 PART NAME: HOSE KIT–AVALANCHE 8860	
			APP'D BY – DATE: – PAGE: 1 OF 3 DWG NO.: 70283 REV: A	

70296 PUMP (5 FUNCTION)
70254 PUMP (6 FUNCTION)
70248 PUMP (7 FUNCTION)

PIN	GAGE	COLOR	
1	16	RED	INPUT 12V+ FROM PUMP (MINIMUM 10.5V)
2	16	RED	INPUT 12V+ FROM PUMP (MINIMUM 10.5V)
3	16	BLACK	

PIN	GAGE	COLOR	
1			
2	18	BLACK/YELLOW	SPLICE TO GROUND
3			
4	18	YELLOW/BLACK	INPUT 12V+ FROM PRESSURE SWITCH
5			
6	18	GREEN	OUTPUT 12V+ TO PUMP RETRACT
7			
8	18	YELLOW	OUTPUT 12V+ TO PUMP VALVE RR
9	18	ORANGE	OUTPUT 12V+ TO PUMP VALVE LR
10	18	WHITE	OUTPUT 12V+ TO PUMP VALVE RF
11	18	BROWN	OUTPUT 12V+ TO PUMP VALVE LF
12	18	BLUE	OUTPUT 12V+ TO PUMP EXTEND

6309 HARNESS

Connects to slide switch harness.

PIN	GAGE	COLOR	
1	16	GREEN/WHITE	INPUT. 12V+ TO SLIDE #1 VALVE COIL
2	16	PURPLE/BLACK	INPUT. 12V+ TO SLIDE #2 VALVE COIL
3	16	DARK BLUE	INPUT. 12V+ TO MOTOR EXTEND SOLENOID
4	16	GREY/BLACK	INPUT. 12V+ TO SLIDE #3 VALVE COIL
5	16	RED/BLACK	INPUT. 12V+ TO SLIDE #4 VALVE COIL
6	16	DARK GREEN	INPUT. 12V+ TO MOTOR RETRACT SOLENOID

Connects to dual switch gear or In Command harness.

PIN	GAGE	COLOR	
1	14	RED	12V+ RED (15A FUSE)
2	16	DARK GREEN	INPUT. 12V+ TO MOTOR RETRACT SOLENOID
3	16	DARK BLUE	INPUT. 12V+ TO MOTOR EXTEND SOLENOID
4	18	BROWN	INPUT. 12V+ TO LEFT FRONT VALVE COIL
5	18	WHITE	INPUT. 12V+ TO RIGHT FRONT VALVE COIL
6			

PIN	GAGE	COLOR
1	18	ORANGE
2	18	WHITE
3	18	BLUE
4	18	YELLOW
5	18	BROWN
6	18	GREEN
7		
8		
9	18	YELLOW/BLACK

PIN	GAGE	COLOR	
1	18	ORANGE	INPUT. 12V+ TO LEFT REAR VALVE COIL
2	18	WHITE	INPUT. 12V+ TO RIGHT FRONT VALVE COIL
3	16	DARK BLUE	INPUT. 12V+ TO MOTOR EXTEND SOLENOID
4	18	YELLOW	INPUT. 12V+ TO RIGHT REAR VALVE COIL
5	18	BROWN	INPUT. 12V+ TO LEFT FRONT VALVE COIL
6	16	DARK GREEN	INPUT. 12V+ TO MOTOR RETRACT SOLENOID
7			
8			
9	18	YELLOW/BLACK	PRESSURE SW 12V+ OUTPUT

6572C HARNESS

PIN	GAGE	COLOR
B	16	BLACK
A	12	RED

PIN	GAGE	COLOR	
B	12	BLACK	GROUND FROM CHASSIS
A	12	RED	12V+ YELLOW (20A FUSE)

EQUALIZER SYSTEMS MAIN 12V POWER INPUT. FROM PUMP MOTOR SOLENOID AND CHASSIS BATTERIES.

GROUND INPUT FROM CHASSIS CONNECTED TO STUD ON SIDE OF PUMP

Equalizer ELKHART, IN 46515

NOTICE – This drawing, including principles of design, is the property of Days Corporation, Elkhart, Indiana, with the agreement that it is not to be reproduced, copied, or loaned in any manner that may constitute a detriment directly or indirectly to Days Corporation. Acceptance of this will be construed as an agreement of the above.

#	REVISIONS	BY:	DATE:
A	Added additional pumps to cover all systems.	SJ	1/18/21

UNLESS OTHERWISE SPECIFIED: TOLERANCES: .XXX ± 0.010 .XX ± 0.010 .X ± 0.030 ANG. ± 1/2' REMOVE ALL BURRS AND SHARP EDGES .015 MAX	TITLE: EQ SMART LEVEL SCHEMATIC	USED ON: KEYSTONE FIFTH WHEEL TRAILERS
	SIZE: A SCALE: 1: 1 MATERIAL:	
	DRW BY: SJ DATE: 10/2/19	PART NAME: 8835 WIRING SCHEMATIC
	APP'D BY – DATE: – PAGE: 1 OF 1 DWG NO.: P8835	REV: A